CONVEYOR

ENGINEERING & MANUFACTURING

SCREW CONVEYOR COMPONENTS & DESIGN

Version 2.24

1345 76th Ave SW
Cedar Rapids, IA 52404
PH 319.364.5600 / 800.452.4027
FAX 319.364.6449

www.conveyoreng.com

engineering@conveyoreng.com
sales@conveyoreng.com

Copyright © 2016 by Conveyor Eng. & Mfg. Co. All rights reserved.
This manual and all items included may not be reproduced in any form without written permission from CEMC.

INTRODUCTION

Conveyor Engineering & Manufacturing would like to thank you for expressing interest in our products. We specialize in stainless steel screw conveyors, mixers and screw presses used in a variety of industries. The cornerstone of our success for over three decades has been our ability to provide a quality product at a reasonable price in a timely manner.

SERVICE

Our commitment to outstanding service has been the main reason for our consistent growth since 1977 as we recently built a much larger manufacturing facility to maintain this level. When it comes to service, we have one goal — to provide the best in the industry. Absolutely no one ships hot jobs quicker. We can do this by stocking the raw materials we need and operating only one full shift in our manufacturing plant. This allows us the flexibility to extend hours when needed and greater access to key equipment and material when hot jobs are ordered. We have a full engineering staff on hand capable of performing system simulations, finite element analysis, etc. and discuss any questions you may have.

QUALITY

When it comes to quality, we will put our products up against anyone in the industry. Prior to manufacturing, all custom conveyor designs must pass a computer stress analysis covering bolts, flights, pipe and shafts. On request, this information can be provided at time of quotation. Our components are manufactured in-house allowing us to keep tight reign on quality control and must pass a full inspection prior to shipping.

PRICE

Our stainless conveyors are built entirely under our roof. You will not pay multiple markups for subcontracted parts. We handle complete manufacturing and engineering functions through our facility in Cedar Rapids. This means that, even with industry leading standards for quality and service, we can still offer very competitive pricing.

REFERENCES

Our customer base has grown over the years primarily by word of mouth through satisfied customers. This has given us the opportunity to work with companies such as:

- 3M
- ADM
- AGP
- Amalgamated Sugar
- American Crystal Sugar
- Amoco Chemical
- Anheuser-Busch
- Barr-Rosin
- Bunge
- Cargill
- Con-Agra
- Dow Chemical
- DuPont
- Excel
- General Foods
- General Mills
- Georgia-Pacific
- Hershey's
- Hormel Foods
- ICM
- International Paper
- Kellogg's
- Kimberly-Clark
- Kraft Foods
- M & M Mars
- Michigan Sugar
- Monfort
- Monitor Sugar
- Monsanto
- Nabisco Brands
- National Starch
- Nestle
- Penford Products
- Poet
- PPG
- Procter & Gamble
- Quaker Oats
- Ralston Foods
- Roquette America
- Southern Minn. Beet Sugar
- Tate & Lyle
- Tyson Foods
- Wausau Paper
- Western Sugar

Again, thank you for the opportunity to get to know us better — we are very proud of the work we do and look forward to working with you.

PHONE 319.364.5600 | 800.452.4027 **FAX** 319.364.6449

TABLE OF CONTENTS

ENGINEERING

Advantages of Screw Conveyors 4
Conveyor Design Steps..... 4
Material Classification Codes 5
Special Materials and Applications..... 15
Conveyor Size and Speed..... 16
Conveyor Capacity 17
Material Lump Size..... 18
Horsepower Calculation 19
Drive Efficiency..... 20
Component Sizing 23
Torsional Rating, Torque Calculation..... 24
Screw Deflection..... 26
Thermal Expansion..... 26
Abrasion 27

COMPONENTS

Conveyor Component Diagram..... 28
Conveyor Layout 29
Screws..... 30
Coupling Bolts/Bolt Pads..... 41
Shafts 42
Troughs 46
Mounting Feet..... 51
End Plates 52
Covers 58
Hangers..... 64
Hanger Bearings..... 70
Internal Collars 71
Shaft Seals 72
End Bearings..... 78
Inlets..... 81
Discharges..... 82
Trough End Flanges 84
Flange Bolt Patterns..... 86
Slide Gates..... 88

OTHER

Weld Finishes..... 31
Screw Part Numbers 32
Shaft Run-Out..... 40
Engineered Products..... 93
Safety 97
Installation and Maintenance..... 98
Coupling Bolt Torque Limits..... 99
Conveyor Spec Sheet..... 100
Engineering Reference Data 102
Component Part Number Index..... 105
Index..... 106

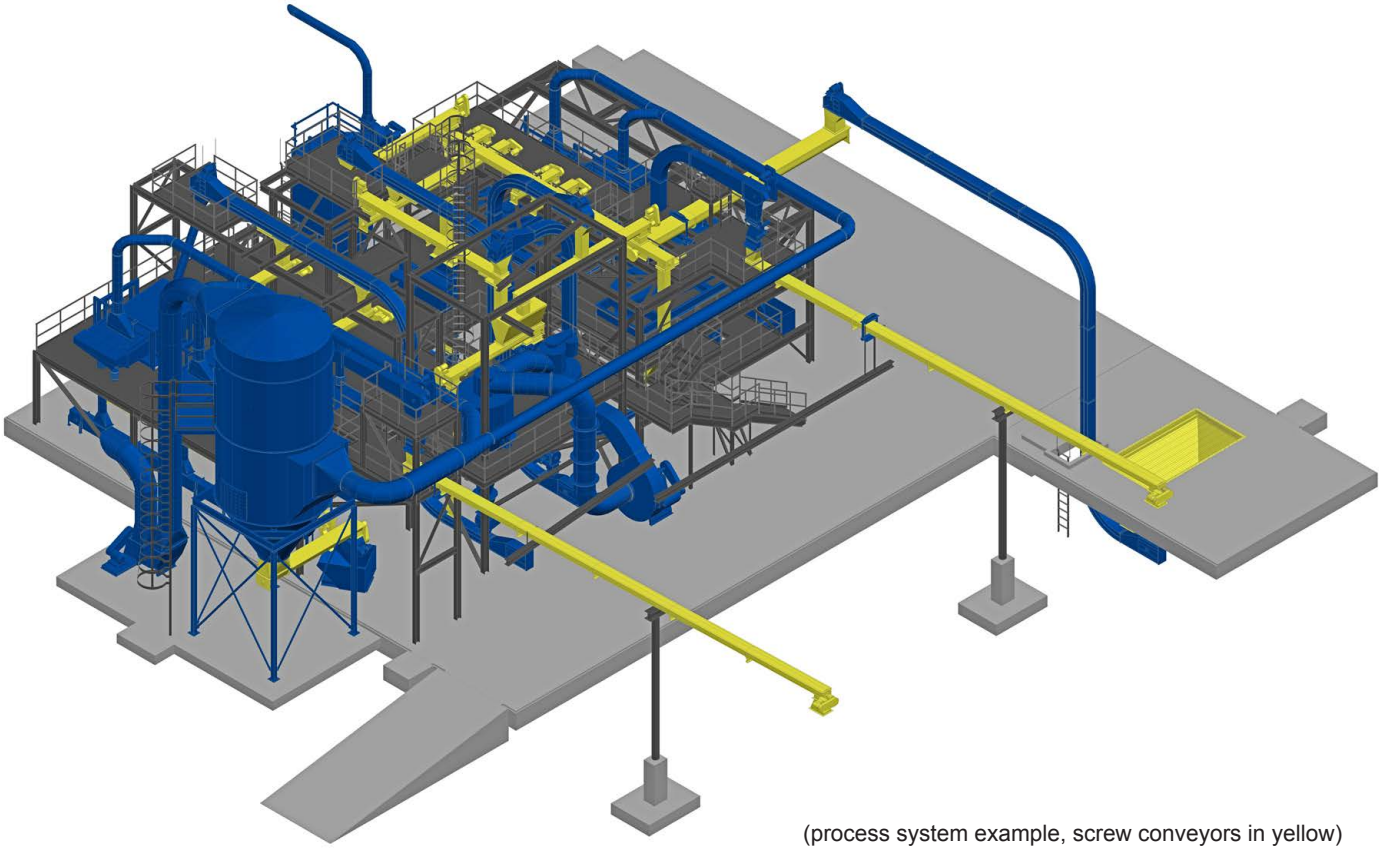

(process system example, screw conveyors in yellow)

CONVEYOR DESIGN

The screw conveyor is one of the oldest methods of conveying materials known to mankind with the original design dating back to more than two thousand years. Since the screw conveyor came into general use a little over a century ago for moving grains, fine coal and other bulk material of the times, it has come to occupy a unique place in a growing area of material handling processing. Today, modern technology has made the screw conveyor one of the most efficient and economical methods of moving bulk material.

WHAT ARE THE ADVANTAGES?

Screw Conveyors...

- are **compact** and easily adapted to congested locations.
- can be used to **control the flow of material** in processing operations which depend upon **accurate batching**.
- are **versatile** and can be employed in **horizontal, inclined and vertical installations**.
- can be used as a **mixer** or **agitator** to **blend** dry or fluid ingredients, provide crystallization or coagulant action, or maintain solutions in suspension.
- **can be sealed** to prevent the escape of dust or fumes from inside the conveyor; or keep dust or moisture from entering from outside the conveyor.
- can be **jacketed** to serve as a **drier** or **cooler** by running hot or cold water through the jacket.

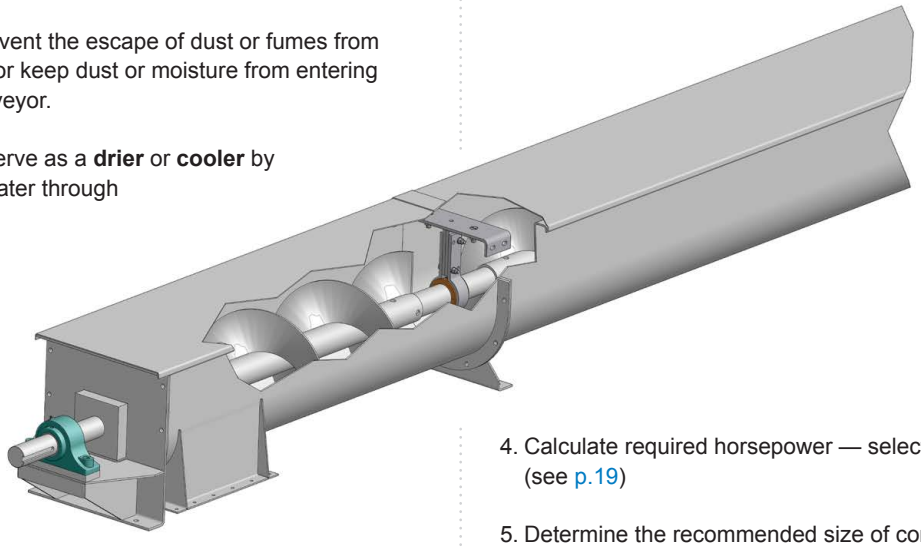

- can be **made out of a variety of materials** to resist corrosion, abrasion or heat, depending upon the product being conveyed.
- can be outfitted with **multiple discharge points**.

Many years of experience in the design and practical application of screw conveyors has resulted in the refinement of conveyor design. This design procedure, outlined in the Engineering Section of this catalog, makes it possible to calculate size, speed and required power with a minimum of mathematical calculations.

Using the following steps, in conjunction with the tables and graphs on the following pages, you will be able to estimate the specifications for a horizontal screw conveyor. We can provide a more thorough design including stress analysis, etc. that are beyond the scope of this engineering section so specifications should be established with the assistance of our engineering department.

CONVEYOR DESIGN STEPS:

Note: *If you need a conveyor designed/quoted you can simply fill out the spec sheet on* p.100*, send it to us and we will work through the design steps for you* or you can do it yourself using the following steps:

1. Establish conveying requirements (see below)
2. Identify the material and the corresponding material code (see p.5)
3. Determine conveying capacity, conveyor size and speed (see p.16)
4. Calculate required horsepower — select motor size (see p.19)
5. Determine the recommended size of components (see p.23)
6. Check the torsional ratings of components (see p.24)
7. Check deflection, thermal expansion and abrasion (see p.26)

STEP 1: ESTABLISH CONVEYING REQUIREMENTS

To properly design a conveyor to meet your needs it is important to know several parameters surrounding the application. Fortunately, to begin, you only need to know a few. These are:

- Type of material to be conveyed
- Required flow (lbs per hour or cubic feet per hour)
- Distance material will be conveyed

MATERIALS

STEP 2: IDENTIFY MATERIAL AND CORRESPONDING MATERIAL CODE

The type of material being moved can have a significant affect on the size and type of conveyor needed. The following charts will help you classify your material and will help in selecting the proper conveyor components.

TABLE A: Material Classification Code

CATEGORY: MATERIAL CHARACTERISTICS	CODE DESIGNATION
Density:	
Bulk Density	avg. lbs/CF
Size:	
Very Fine — 100 mesh and under	A
Fine — ⅛" mesh and under	B
Granular — ½" mesh and under	C
Lumpy — containing lumps over ½"	D
Irregular — fibrous, stringy, etc	E
Flowability:	
Very free flowing	1
Free flowing	2
Average flowability	3
Sluggish	4
Abrasiveness:	
Mildly abrasive	5
Moderately abrasive	6
Extremely abrasive	7
Other Characteristics:	
Builds up & hardens	F
Generates static electricity	G
Decomposes — deteriorates in storage	H
Flammability	J
Becomes plastic or tends to soften	K
Very dusty	L
Aerates and becomes fluid	M
Explosiveness	N
Stickiness-adhesion	O
Contaminable, affecting use	P
Degradable, affecting use	Q
Gives off harmful or toxic gas or fumes	R
Highly corrosive	S
Mildly corrosive	T
Hygroscopic	U
Interlocks, mats or agglomerates	V
Oils present	W
Packs under pressure	X
Very light and fluffy — may be windswept	Y
Elevated temperature	Z

For screw conveyor design purposes, conveyed materials are classified in accordance with the code system shown in **Table A**. This system conforms to that of the Conveyor Equipment Manufacturers Association (CEMA) which ranks each material in 5 categories. **Table B** lists the codes for many materials that can be effectively conveyed by a screw conveyor. If a material is not listed in **Table B**, it must be classified according to **Table A**, or by referring to a listed material that is similar in weight, particle size and other characteristics.

Example:

Gluten, Meal = 40B35P (from table B)

40 = Density (40 lbs per cubic foot)

B = Size of material (fine, ⅛" mesh and under)

3 = Flowability (average)

5 = Abrasiveness (mild)

P = Other Characteristics (contaminable)

MATERIALS

TABLE B: Material Characteristics

MATERIAL	MAT'L CLASS CODE	CONV LOADING	COMPONENT GROUP	WEIGHT (LBS/CF)		MAT'L FACTOR F_M	VERT.*
				MIN	MAX		
Adipic Acid	45A35	30A	2B	45	45	0.5	x
Alfalfa Meal	18B45WY	30A	2D	14	22	0.6	x
Alfalfa Pellets	42C25	45	2D	41	43	0.5	
Alfalfa Seed	13B15N	45	1A,1B,1C	10	15	0.4	x
Almonds, Broken	29C35Q	30A	2D	27	30	0.9	
Almonds, Whole Shelled	29C35Q	30A	2D	28	30	0.9	
Alum, Fine	48B35U	30A	3D	45	50	0.6	
Alum, Lumps	55B25	45	2A,2B	50	60	1.4	
Alumina	58B27MY	15	3D	55	65	1.8	
Alumina Fines	35A27MY	15	3D	35	35	1.6	
Alumina Sized or Briquette	65D37	15	3D	65	65	2.0	
Aluminate Gel (Aluminate Hydroxide)	45B35	30B	2D	45	45	1.7	x
Aluminum Chips, Dry	11E45V	30A	2D	7	15	1.2	
Aluminum Chips, Oily	11E45VY	30A	2D	7	15	0.8	x
Aluminum Hydrate	17C35	30A	1A,1B,1C	13	20	1.4	x
Aluminum Ore (see Bauxite)							
Aluminum Oxide	90A17MN	15	3D	60	120	1.8	
Aluminum Silicate (Andalusite)	49C35S	45	3A,3B	49	49	0.7	x
Aluminum Sulfate	52C25	45	1A,1B,1C	45	58	1.3	
Ammonium Chloride, Crystalline	49A45FRS	30A	1A,1B,1C	45	52	1.0	?
Ammonium Nitrate	54A35NTU	30A	3D	45	62	1.6	?
Ammonium Sulfate	52C35FOTU	30A	1A,1B,1C	45	58	1.0	?
Antimony Powder	A35	30B	2D	—		1.6	x
Apple Pomace, Dry	15C45Y	30B	2D	15	15	1.0	x
Arsenate of Lead (Lead Arsenate)	72A35R	30A	1A,1B,1C	72	72	1.4	?
Arsenic Oxide (Arsenolite)**	110A35R	30A	-	100	120	1.2	
Arsenic Pulverized	30A25R	45	2D	30	30	1.0	
Asbestos-Rock (Ore)	81D37R	15	3D	81	81	2.0	?
Asbestos-Shredded	30E46XY	30B	2D	20	40	1.0	?
Ash, Black Ground	105B35	30A	1A,1B,1C	105	105	2.5	
Ashes, Coal, dry, ½"	40C46TY	30B	3D	35	45	3.0	x
Ashes, Coal, dry, 3"	38D46T	30B	3D	35	40	2.5	
Ashes, Coal, Wet, ½"	48C46T	30B	3D	45	50	3.0	
Ashes, Coal, Wet, 3"	48D46T	30B	3D	45	50	4.0	
Ashes, Fly (Fly Ash)	38A36M	30B	3D	30	45	2.0	
Aspartic Acid	42A35XPLO	30A	1A,1B,1C	33	51	1.5	?
Asphalt, Crushed, ½"	45C45	30A	1A,1B,1C	45	45	2.0	x
Bagasse	9E45RVXY	30A	2A,2B,2C	7	10	1.5	
Bakelite, Fine	38B25	45	1A,1B,1C	30	45	1.4	x
Baking Powder	48A35	30A	1B	40	55	0.6	x
Baking Soda (Sodium Bicarbonate)	48A25	45	1B	40	55	0.6	x
Barite (Barium Sulfate), ½" to 3"	150D36	30B	3D	120	180	2.6	
Barite, Powder	150A35X	30A	2D	120	180	2.0	x
Barium Carbonate	72A45R	30A	2D	72	72	1.6	
Bark, Wood, Refuse	15E45TVY	30A	3D	10	20	2.0	
Barley, Fine, Ground	31B35	30A	1A,1B,1C	24	38	0.4	x
Barley, Malted	31C35	30A	1A,1B,1C	31	31	0.4	x
Barley, Meal	28C35	30A	1A,1B,1C	28	28	0.4	x
Barley, Whole	42B25N	45	1A,1B,1C	36	48	0.5	x
Basalt	93B27	15	3D	80	105	1.8	?
Bauxite, Crushed, 3" (Aluminum Ore)	80D36	30B	3D	75	85	2.5	?
Bauxite, Dry, Ground (Aluminum Ore)	68B25	45	2D	68	68	1.8	?
Beans, Castor, Meal	38B35W	30A	1A,1B,1C	35	40	0.8	x
Beans, Castor, Whole Shelled	36C15W	45	1A,1B,1C	36	36	0.5	x

PHONE 319.364.5600 | 800.452.4027 **FAX** 319.364.6449

MATERIALS

TABLE B: Material Characteristics (continued)

MATERIAL	MAT'L CLASS CODE	CONV LOADING	COMPONENT GROUP	WEIGHT (LBS/CF)		MAT'L FACTOR F_M	VERT.*
				MIN	MAX		
Beans, Navy, Dry	48C15	45	1A,1B,1C	48	48	0.5	?
Beans, Navy, Steeped	60C25	45	1A,1B,1C	60	60	0.8	?
Bentonite, 100 Mesh	55A25MXY	45	2D	50	60	0.7	x
Bentonite, Crude	37D45X	30A	2D	34	40	1.2	
Benzene Hexachloride	56A45R	30A	1A,1B,1C	56	56	0.6	?
Bicarbonate of Soda (Baking Soda)	48A25	45	1B	40	55	0.6	?
Blood, Dried	40D45U	30A	2D	35	45	2.0	x
Blood, Ground, Dried	30A35U	30A	1A,1B,	30	30	1.0	x
Bone Ash (Tricalcium Phosphate)	45A45	30A	1A,1B	40	50	1.6	
Boneblack	23A25Y	45	1A,1B	20	25	1.5	x
Bonechar	34B35	30A	1A,1B	27	40	1.6	x
Bonemeal	55B35	30A	2D	50	60	1.7	x
Bones, Crushed	43D45	30A	2D	35	50	2.0	x
Bones, Ground	50B35	30A	2D	50	50	1.7	x
Bones, Whole**	43E45V	30A	2D	35	50	3.0	
Borate of Lime	60A35	30A	1A,1B,1C	60	60	0.6	
Borax Screening, ½"	58C35	30A	2D	55	60	1.5	
Borax, 1-½" to 2" Lump	58D35	30A	2D	55	60	1.8	
Borax, 2" to 3" Lump	65D35	30A	2D	60	70	2.0	
Borax, Fine	50B25T	45	3D	45	55	0.7	x
Boric Acid, Fine	55B25T	45	3D	55	55	0.8	x
Boron	75A37	15	2D	75	75	1.0	
Bran, Rice-Rye-Wheat	18B355NY	30A	1A,1B,1C	16	20	0.5	
Braunite (Manganese Oxide)	120A36	30B	2D	120	120	2.0	
Bread Crumbs	23B35PQ	30A	1A,1B,1C	20	25	0.6	
Brewer's Grain, spent, dry	22C45	30A	1A,1B,1C	14	30	0.5	x
Brewer's Grain, spent, wet	58C45T	30A	2A,2B	55	60	0.8	
Brick, Ground, ⅛"	110B37	15	3D	100	120	2.2	
Bronze Chips	40B45	30A	2D	30	50	2.0	
Buckwheat	40B25N	45	1A,1B,1C	37	42	0.4	x
Calcine, Flour	80A35	30A	1A,1B,1C	75	85	0.7	
Calcium Carbide	80D25N	30A	2D	70	90	2.0	?
Calcium Carbonate (see Limestone)							
Calcium Fluoride (see Fluorspar)							
Calcium Hydrate (Lime, Hydrated)	40B35LM	30A	2D	40	40	0.8	?
Calcium Hydroxide (Lime, Hydrated)	40B35LM	30A	2D	40	40	0.8	?
Calcium Lactate	28D45QTR	30A	2A,2B	26	29	0.6	
Calcium Oxide (Lime, unslaked)	63B35U	30A	1A,1B,1C	60	65	0.6	?
Calcium Phosphate	45A45	30A	1A,1B,1C	40	50	1.6	
Calcium Sulfate (see Gypsum)							
Canola Meal (Rape Seed Meal)**	38	?	?	34	41	0.8	?
Carbon, Activated, Dry, Fine**	-	-	-	-	-	-	?
Carbon, Black, Pelleted**	-	-	-	-	-	-	?
Carbon, Black, Powder**	-	-	-	-	-	2.0	
Carborundum	100D27	15	3D	100	100	3.0	
Casein	36B35	30A	2D	36	36	1.6	
Cashew Nuts	35C45	30A	2D	32	37	0.7	
Cast Iron, Chips	165C45	30A	2D	130	200	4.0	
Caustic Soda (Sodium Hydroxide)	88B35RSU	30A	3D	88	88	1.8	
Caustic Soda, Flakes	47C45RSUX	30A	3A,3B	47	47	1.5	
Celite (Diatomaceous Earth)	14A36Y	30B	3D	11	17	1.6	?
Cement, Aerated (Portland)	68A16M	30B	2D	60	75	1.4	x
Cement, Clinker	85D36	30B	3D	75	95	1.8	
Cement, Mortar	133B35Q	30A	3D	133	133	3.0	

MATERIALS

TABLE B: Material Characteristics (continued)

MATERIAL	MAT'L CLASS CODE	CONV LOADING	COMPONENT GROUP	WEIGHT (LBS/CF)		MAT'L FACTOR F_M	VERT.*
				MIN	MAX		
Cement, Portland	94A26M	30B	2D	94	94	1.4	x
Cerrusite (Lead Carbonate)	250A35R	30A	2D	240	260	1.0	?
Chalk, Crushed	85D25	30A	2D	75	95	1.9	
Chalk, Pulverized	71A25MXY	45	2D	67	75	1.4	
Charcoal, Ground	23A45	30A	2D	18	28	1.2	
Charcoal, Lumps	23D45Q	30A	2D	18	28	1.4	
Chocolate, Cake Pressed	43D25	30A	2B	40	45	1.5	
Chrome Ore	133D36	30B	3D	125	140	2.5	
Cinders, Blast Furnace	57D36T	30B	3D	57	57	1.9	
Cinders, Coal	40D36T	30B	3D	40	40	1.8	
Clay (Marl)	80D36	30B	2D	80	80	1.6	?
Clay (see Bentonite, Diat. Earth)							
Clay (see also Fuller's Earth, Kaolin & Marl)							
Clay, Brick, Dry, Fines	110C36	30B	3D	100	120	2.0	
Clay, Calcined	90B36	30B	3D	80	100	2.4	
Clay, Ceramic, Dry, Fines	70A35P	30A	1A,1B,1C	60	80	1.5	x
Clay, Dry, Lumpy	68D35	30A	2D	60	75	1.8	
Clinker, Cement (Cement Clinker)	85D36	30B	3D	75	95	1.8	?
Clover Seed	47B25N	45	1A,1B,1C	45	48	0.4	x
Coal, Anthracite (River & Culm)	58B35TY	30A	2A,2B	55	61	1.0	
Coal, Anthracite, Sized, ½"	55C25	45	2A,2B	49	61	1.0	
Coal, Bituminous, Mined	50D35LNYX	30A	1A,1B	40	60	1.0	
Coal, Bituminous, Mined, Sized	48D35QV	30A	1A,1B	45	50	1.0	
Coal, Bituminous, Mined, Slack	47C45T	30A	2A,2B	43	50	0.9	
Coal, Lignite	41D35T	30A	2D	37	45	1.0	
Cocoa Beans	38C25Q	30A	1A,1B	30	45	0.5	
Cocoa, Nibs	35C25	45	2D	35	35	0.5	
Cocoa, Powdered	33A45XY	30A	1B	30	35	0.9	
Coconut, Shredded	21E45	30B	2B	20	22	1.5	x
Coffee, Chaff	20B25FZMY	45	1A,1B	20	20	1.0	x
Coffee, Green Bean	29C25PQ	45	1A,1B	25	32	0.5	
Coffee, Ground, Dry	25A35P	30A	1A,1B	25	25	0.6	x
Coffee, Ground, Wet	40A45X	30A	1A,1B	35	45	0.6	
Coffee, Roasted Bean	25C25PQ	45	1B	20	30	0.4	x
Coffee, Soluble	19A35PUY	30A	1B	19	19	0.4	x
Coke, Breeze	30C37	15	3D	25	35	1.2	
Coke, Loose	30D37	15	3D	25	35	1.2	
Coke, Petrol, Calcined	40D37	15	3D	35	45	1.3	
Compost	40D45TV	30A	3A,3B	30	50	1.0	
Concrete, Pre-Mix Dry	103C36U	30B	3D	85	120	3.0	
Copper Ore	135D36	30B	3D	120	150	4.0	
Copper Ore, Crushed	125D36	30B	3D	100	150	4.0	
Copper Sulphate, (Bluestone, Cupric Sulphate)	85C35S	30A	2A,2B,2C	75	95	1.0	
Copperas (Ferrous Sulphate)	63C35U	30A	2D	50	75	1.0	?
Copra, Cake Ground	43B45HW	30A	1A,1B,1C	40	45	0.7	x
Copra, Cake, Lumpy	28D35HW	30A	2A,2B,2C	25	30	0.8	
Copra, Lumpy	22E35HW	30A	2A,2B,2C	22	22	1.0	
Copra, Meal	43B35HW	30A	2D	40	45	0.7	x
Cork, Fine Ground	10B35JNY	30A	1A,1B,1C	5	15	0.5	x
Cork, Granulated	14C35JY	30A	1A,1B,1C	12	15	0.5	x
Corn Cobs, Ground	17C25Y	45	1A,1B,1C	17	17	0.6	
Corn Cobs, Whole*	14E45NV	30A	2A,2B	12	15		x
Corn Fiber, Dry	14B46P	30B	1A,1B,1C	12	15	1.0	x
Corn Fiber, Wet	33B46P	30B	1A,1B,1C	15	50	1.5	x

PHONE 319.364.5600 | 800.452.4027 **FAX** 319.364.6449

MATERIALS

TABLE B: Material Characteristics (continued)

MATERIAL	MAT'L CLASS CODE	CONV LOADING	COMPONENT GROUP	WEIGHT (LBS/CF)		MAT'L FACTOR F_M	VERT.*
				MIN	MAX		
Corn Oil, Cake	25D45HW	30A	1A,1B	25	25	0.6	x
Corn, Cracked	45B25P	45	1A,1B,1C	40	50	0.7	x
Corn, Ear**	-	-	2A,2B	56	56	-	
Corn, Germ, Dry	21B35PY	30A	1A,1B,1C	21	21	0.4	x
Corn, Germ, Wet (50% moisture)	30B35PY	30A	1A,1B,1C	30	30	0.4	
Corn, Gluten (see Gluten Meal)							
Corn, Grits	43B35P	30A	1A,1B,1C	40	45	0.5	x
Corn, Seed	45C25PQ	45	1A,1B,1C	45	45	0.4	
Corn, Shelled	45C25	45	1A,1B,1C	45	45	0.4	x
Corn, Starch*	38A15MN	45	1A,1B,1C	25	50	1.0	?
Corn, Sugar	33B35PU	30A	1B	30	35	1.3	x
Cornmeal	36B35P	30A	1A,1B	32	40	0.5	x
Cottonseed, Cake	43C45HW	30A	1A,1B	40	45	1.0	x
Cottonseed, Dry, Delinted	31C25X	45	1A,1B	22	40	0.6	x
Cottonseed, Dry, Not Delinted	22C45XY	30A	1A,1B	18	25	0.9	x
Cottonseed, Flakes	23C35HWY	30A	1A,1B	20	25	0.8	x
Cottonseed, Hulls	12B35Y	30A	1A,1B	12	12	0.9	x
Cottonseed, Meal, Expeller	28B45HW	30A	3A,3B	25	30	0.5	x
Cottonseed, Meal, Extracted	38B45HW	30A	1A,1B	35	40	0.5	x
Cottonseed, Meats, Dry	40B35HW	30A	1A,1B	40	40	0.6	x
Cottonseed, Meats, Rolled	38C45HW	30A	1A,1B	35	40	0.6	x
Cracklings, Crushed	45D45HW	30A	2A,2B,2C	40	50	1.3	x
Cryolite, Dust (Sodium Aluminum Fluoride)	83A36V	30B	2D	75	90	2.0	x
Cryolite, Lumpy (Kryalith)	100D36	30B	2D	90	110	2.1	x
Cullet, Fine	100C37	15	3D	80	120	2.0	
Cullet, Lump	100D37	15	3D	80	120	2.5	
Culm, (Coal, Anthracite)	58B35TY	30A	2A,2B	55	61	1.0	?
Cupric Sulphate (Copper Sulfate)	85C35S	30A	2A,2B,2C	75	95	1.0	?
Diatomaceous Earth (Filter Aid, Precoat)	14A36Y	30B	3D	11	17	1.6	?
Dicalcium Phosphate	45A35	30A	1A,1B,1C	40	50	1.6	x
Disodium Phosphate	28A35	30A	3D	25	31	0.5	
Distiller's Grain, Spent Wet	50C45V	30A	3A,3B	40	60	0.8	
Distiller's Grain, Spent Wet w/Syrup	56C45VXOH	30A	3A,3B	43	68	1.2	
Distiller's Grain-Spent Dry	30B35	30A	2D	30	30	0.5	
Dolomite, Crushed	90C36	30B	2D	80	100	2.0	
Dolomite, Lumpy	95D36	30B	2D	90	100	2.0	
Earth, Loam, Dry, Loose	76C36	30B	2D	76	76	1.2	
Ebonite, Crushed	67C35	30A	1A,1B,1C	63	70	0.8	x
Egg Powder	16A35MPY	30A	1B	16	16	1.0	
Epsom Salts (Magnesium Sulfate)	45A35U	30A	1A,1B,1C	40	50	0.8	x
Feldspar, Ground	73A37	15	2D	65	80	2.0	
Feldspar, Lumps	95D37	15	2D	90	100	2.0	
Feldspar, Powder	100A36	30B	2D	100	100	2.0	
Felspar, Screenings	78C37	15	2D	75	80	2.0	
Ferrous Sulfide, ½" (Iron Sulfide, Pyrites)	128C26	30B	1A,1B,1C	120	135	2.0	x
Ferrous Sulfide, 100M (Iron Sulfide, Pyrites)	113A36	30B	1A,1B,1C	105	120	2.0	x
Ferrous Sulphate (Iron Sulphate, Copperas)	63C35U	30A	2D	50	75	1.0	
Filter-Aid (Diatomaceous Earth, Precoat)	14A36Y	30B	3D	11	17	1.6	?
Fish Meal	38C45HP	30A	1A,1B,1C	35	40	1.0	x
Fish Scrap	45D45H	30A	2A,2B,2C	40	50	1.5	
Flaxseed	44B35X	30A	1A,1B,1C	43	45	0.4	x
Flaxseed Cake (Linseed Cake)	49D45W	30A	2A,2B	48	50	0.7	
Flaxseed Meal (Linseed Meal)	35B45W	30A	1A,1B	25	45	0.4	x
Flour Wheat	37A45LP	30A	1B	33	40	0.6	?

MATERIALS

TABLE B: Material Characteristics (continued)

MATERIAL	MAT'L CLASS CODE	CONV LOADING	COMPONENT GROUP	WEIGHT (LBS/CF)		MAT'L FACTOR F_M	VERT.*
				MIN	MAX		
Flue Dust, Basic Oxygen Furnace	53A36LM	30B	3D	45	60	3.5	
Flue Dust, Blast Furnace	118A36	30B	3D	110	125	3.5	
Flue Dust, Boiler H. Dry	38A36LM	30B	3D	30	45	2.0	
Fluorspar, Fine (Calcium Floride)	90B36	30B	2D	80	100	2.0	
Fluorspar, Lumps	100D36	30B	2D	90	110	2.0	
Flyash	38A36M	30B	3D	30	45	2.0	?
Foundry Sand, Dry (Sand)	95D37Z	15	3D	90	100	2.6	?
Fuller's Earth, Calcined	40A25	45	3D	40	40	2.0	
Fuller's Earth, Dry, Raw (Bleach Clay)	35A25	45	2D	30	40	2.0	
Fuller's Earth, Oily, Spent (Spent Bleach Clay)	63C45OW	30A	3D	60	65	2.0	
Galena (Lead Sulfide)	250A35R	30A	2D	240	260	-	?
Gelatine, Granulated	32B35PU	30A	1B	32	32	0.8	x
Gilsonite	37C35	30A	3D	37	37	1.5	
Glass, Batch	90C37	15	3D	80	100	2.5	
Glue, Ground	40B45U	30A	2D	40	40	1.7	
Glue, Pearl	40C35U	30A	1A,1B,1C	40	40	0.5	
Glue, Veg. Powdered	40A45U	30A	1A,1B,1C	40	40	0.6	
Gluten, Meal (Dry Corn Gluten)	40B35P	30A	1B	40	40	0.6	
Gluten, Meal (Wet Corn Gluten)	43B35OPH	30A	1B	43	43	2.2	
Granite, Fine	85C27	15	3D	80	90	2.5	
Grape, Pomace	18D45U	30A	2D	15	20	1.4	x
Graphite Flake (Plumago)	40B25LP	45	1A,1B,1C	40	40	0.5	x
Graphite Flour	28A35LMP	30A	1A,1B,1C	28	28	0.5	
Graphite Ore	70D35L	30A	2D	65	75	1.0	?
Guano Dry**	70C35	30A	3A,3B	70	70	2.0	
Gypsum, Calcined (Plaster of Paris)	58B35U	30A	2D	55	60	1.6	
Gypsum, Calcined, Powdered (Plaster of Paris)	70A35U	30A	2D	60	80	2.0	
Gypsum, Raw 1" (Calc. Sulfate, Plast. of Paris)	75D25	30A	2D	70	80	2.0	
Hay, Chopped**	10C35JY	30A	2A,2B	8	12	1.6	
Hexanedioic Acid (Adipic Acid)	45A35	30A	2B	45	45	0.5	?
Hominy, Dry	43C25D	30A	1A,1B,1C	35	50	0.4	x
Hops, Spend, Dry	35D35	30A	2A,2B,2C	35	35	1.0	x
Hops, Spent, Wet	53D45V	30A	2A,2B	50	55	1.5	
Ice, Crushed	40D35O	30A	2A,2B	35	45	0.4	x
Ice, Cubes	34D35O	30A	1B	33	35	0.4	x
Ice, Flaked**	43C35O	30A	1B	40	45	0.6	x
Ice, Shell	34D45O	30A	1B	33	35	0.4	x
Ilmenite Ore (Titanium Dioxide)	150D37	15	3D	140	160	2.0	
Iron Ore Concentrate	150A37	15	3D	120	180	2.2	
Iron Oxide Pigment	25A36LMP	30B	1A,1B,1C	25	25	1.0	
Iron Oxide, Millscale	75C36	30B	2D	75	75	1.6	
Iron Pyrites (see Ferrous Sulfide)							
Iron Sulfide (see Ferrous Sulfide)							
Iron Sulphate (Ferrous Sulfate)	63C35U	30A	2D	50	75	1.0	?
Iron Vitriol (Ferrous Sulfate)	63C35U	30A	2D	50	75	1.0	?
Kafir (Corn)	43C25	45	3D	40	45	0.5	x
Kaolin Clay	63D25	30A	2D	63	63	2.0	
Kaolin Clay (Tale)	49A35LMP	30A	2D	42	56	2.0	
Kryalith (see Cryolite)							
Lactose	32A35PU	30A	1B	32	32	0.6	
Lamp Black (see Carbon Black)							
Lead Arsenate	72A35R	30A	1A,1B,1C	72	72	1.4	
Lead Carbonate (Cerrusite)	250A35R	30A	2D	240	260	1.0	
Lead Ore, ½"	205C36	30B	3D	180	230	1.4	

PHONE 319.364.5600 | 800.452.4027 **FAX** 319.364.6449

MATERIALS

TABLE B: Material Characteristics (continued)

MATERIAL	MAT'L CLASS CODE	CONV LOADING	COMPONENT GROUP	WEIGHT (LBS/CF)		MAT'L FACTOR F_M	VERT.*
				MIN	MAX		
Lead Ore, ⅛"	235B35	30A	3D	200	270	1.4	
Lead Oxide (Red Lead, Litharge) 100 Mesh	90A35P	30A	2D	30	150	1.2	
Lead Oxide (Red Lead, Litharge) 200 Mesh	105A35LP	30A	2D	30	180	1.2	
Lead Sulphide, 100 Mesh (Galena)	250A35R	30A	2D	240	260	--	
Lignite (Coal Lignite)	41D35T	30A	2D	37	45	1.0	?
Limanite, Ore, Brown	120C47	15	3D	120	120	1.7	
Lime Hydrated (Calcium Hydrate, Hydroxide)	40B35LM	30A	2D	40	40	0.8	x
Lime Pebble	55C25HU	45	2A,2B	53	56	2.0	
Lime, Ground, Unslaked (Quicklime)	63B35U	30A	1A,1B,1C	60	65	0.6	x
Lime, Hydrated, Pulverized	36A35LM	30A	1A,1B	32	40	0.6	x
Limestone, Agricultural (Calcium Carbonate)	68B35	30A	2D	68	68	2.0	
Limestone, Crushed (Calcium Carbonate)	88D36	30B	2D	85	90	2.0	
Limestone, Dust (Calcium Carbonate)	75A46MY	30B	2D	55	95	1.8	
Lindane (Benzene Hexachloride)	56A45R	30A	1A,1B,1C	56	56	0.6	
Linseed (Flaxseed)	44B35X	30A	1A,1B,1C	43	45	0.4	?
Lithopone	48A35MR	30A	1A,1B	45	50	1.0	
Magnesium Chloride (Magnesite)	33C45	30A	1A,1B,1C	33	33	1.0	
Maize (Milo)	43B15N	45	1A,1B,1C	40	45	0.4	?
Malt, Dry Whole	25C35N	30A	1A,1B,1C	20	30	0.5	x
Malt, Dry, Ground	25C35N	30A	1A,1B,1C	20	30	0.5	x
Malt, Meal	38B25P	30A	1A,1B,1C	36	40	0.4	x
Malt, Sprouts	14C35P	30A	1A,1B,1C	13	15	0.4	x
Manganese Dioxide**	78A35NRT	30A	2A,2B	70	85	1.5	
Manganese Ore	133D37	15	3D	125	140	2.0	
Manganese Oxide	120A36	30B	2D	120	120	2.0	
Manganese Sulfate	70C37	15	3D	70	70	2.4	
Marble, Crushed	88B37	15	3D	80	95	2.0	
Marl (Clay)	80D36	30B	2D	80	80	1.6	?
Meat, Ground	53E45HQTX	30A	2A	50	55	1.5	
Meat, Scrap (W/bone)	40E46H	30B	2B	40	40	1.5	
Mica, Flakes	20B16MY	30B	2D	17	22	1.0	x
Mica, Ground	14B36	30B	2D	13	15	0.9	x
Mica, Pulverized	14A36M	30B	2D	13	15	1.0	x
Milk, Dried, Flake	6B35PUY	30A	1B	5	6	0.4	
Milk, Malted	29A45PX	30A	1B	27	30	0.9	
Milk, Powdered	33B25PM	45	1B	20	45	0.5	
Milk, Sugar	32A35PX	30A	1B	32	32	0.6	
Milk, Whole, Powdered	28B35PUX	30A	1B	20	36	0.5	
Mill Scale (Steel)	123E46T	30B	3D	120	125	3.0	
Milo Maize (Kafir)	43B15N	45	1A,1B,1C	40	45	0.4	x
Milo, Ground (Sorghum Seed, Kafir)	34B25	45	1A,1B,1C	32	36	0.5	x
Molybdenite Powder	107B26	30B	2D	107	107	1.5	
Motar, Wet**	150E46T	30B	3D	150	150	3.0	
Mustard Seed	45B15N	45	1A,1B,1C	45	45	0.4	x
Naphthalene Flakes	45B35	30A	1A,1B,1C	45	45	0.7	x
Niacin (Nicotinic Acid)	35A35P	30A	2D	35	35	0.8	
Oat Hulls	10B35NY	30A	1A,1B,1C	8	12	0.5	x
Oats	26C25MN	45	1A,1B,1C	26	26	0.4	x
Oats, Crimped	23C35	30A	1A,1B,1C	19	26	0.5	x
Oats, Crushed	22B45NY	30A	1A,1B,1C	22	22	0.6	x
Oats, Flour	35A35	30A	1A,1B,1C	35	35	0.5	x
Oats, Rolled	22C35NY	30A	1A,1B,1C	19	24	0.6	x
Oleo (Margarine)	59E45HKPWX	30A	2A,2B	59	59	0.4	
Orange Peel, Dry	15E45	30A	2A,2B	15	15	1.5	

MATERIALS

TABLE B: Material Characteristics (continued)

MATERIAL	MAT'L CLASS CODE	CONV LOADING	COMPONENT GROUP	WEIGHT (LBS/CF)		MAT'L FACTOR F_M	VERT.*
				MIN	MAX		
Oxalic Acid Crystals – Ethane Diacid Crystals	60B35QS	30A	1A,1B	60	60	1.0	
Oyster Shells, Ground	55C36T	30B	3D	50	60	1.8	
Oyster Shells, Whole	80D36TV	30B	3D	80	80	2.3	
Paper Pulp (4% or less)	62E45	30A	2A,2B	62	62	1.5	
Paper Pulp (6% to 15%)	62E45	30A	2A,2B	60	62	1.5	
Paraffin Cake, ½"	45C45K	30A	1A,1B	45	45	0.6	
Peanut Meal	30B35P	30A	1B	30	30	0.6	x
Peanuts, Clean, in shell	18D35Q	30A	2A,2B	15	20	0.6	
Peanuts, Raw (Uncleaned, Unshelled)	18D36Q	30B	3D	15	20	0.7	
Peanuts, Shelled	40C35Q	30A	1B	35	45	0.4	
Peas, Dried	48C15NQ	45	1A,1B,1C	45	50	0.5	x
Perlite, Expanded	10C36	30B	2D	8	12	0.6	
Phosphate Acid Fertilizer	60B25T	45	2A,2B	60	60	1.4	
Phosphate Disodium (Sodium Phosphate)	55A35	30A	1A,1B	50	60	0.9	
Phosphate Rock, Broken	80D36	30B	2D	75	85	2.1	
Phosphate Rock, Pulverized	60B36	30B	2D	60	60	1.7	
Phosphate Sand	95B37	15	3D	90	100	2.0	
Plaster of Paris (see Gypsum)							
Plumbago (see Graphite)							
Polyethylene, Resin Pellets	33C45Q	30A	1A,1B	30	35	0.4	?
Polystyrene Beads	40B35PQ	30A	1B	40	40	0.4	
Polyvinyl Chloride Powder (PVC)	25A45KT	30A	2B	20	30	1.0	
Polyvinyl, Chloride Pellets	25E45KPQT	30A	1B	20	30	0.6	
Potash (Muriate) Dry	70B37	15	3D	70	70	2.0	
Potash (Muriate) Mine Run	75D37	15	3D	75	75	2.2	
Potassium Carbonate	51B36	30B	2D	51	51	1.0	
Potassium Nitrate, ½" (Saltpeter)	76C16NT	30B	3D	76	76	1.2	x
Potassium Nitrate, ⅛" (Saltpeter)	80B26NT	30B	3D	80	80	1.2	
Potassium Sulfate	45B46X	30B	2D	42	48	1.0	
Potassium-Chloride Pellets	125C25TU	45	3D	120	130	1.6	
Potato Flour	48A35MNP	30A	1A,1B	48	48	0.5	x
Pumice, ⅛"	45B46	30B	3D	42	48	1.6	
Pyrite, Pellets	125C26	30B	3D	120	130	2.0	
Quartz, ½" (Silicon Dioxide)	85C27	15	3D	80	90	2.0	
Quartz,100 Mesh (Silicon Dioxide)	75A27	15	3D	70	80	1.7	
Rape Seed Meal (Canola)	38	?	?	34	41	0.8	?
Rice, Bran	20B35NY	30A	1A,1B,1C	20	20	0.4	x
Rice, Grits	44B35P	30A	1A,1B,1C	42	45	0.4	x
Rice, Hulled	47C25P	45	1A,1B,1C	45	49	0.4	x
Rice, Hulls	21B35NY	30A	1A,1B,1C	20	21	0.4	x
Rice, Polished	30C15P	45	1A,1B,1C	30	30	0.4	x
Rice, Rough	34C35N	30A	1A,1B,1C	32	36	0.6	x
Rosin, ½"	67C45Q	30A	1A,1B,1C	65	68	1.5	
Rubber, Pelleted	53D45	30A	2A,2B,2C	50	55	1.5	
Rubber, Reclaimed Ground	37C45	30A	1A,1B,1C	23	50	0.8	x
Rye	45B15N	45	1A,1B,1C	42	48	0.4	x
Rye Bran	18B35Y	30A	1A,1B,1C	15	20	0.4	x
Rye Feed	33B35N	30A	1A,1B,1C	33	33	0.5	x
Rye Meal	38B35	30A	1A,1B,1C	35	40	0.5	x
Rye Middlings	42B35	30A	1A,1B	42	42	0.5	x
Rye, Shorts	33C35	30A	2A,2B	32	33	0.5	x
Safflower Seed (Saffron)	45B15N	45	1A,1B,1C	45	45	0.4	x
Safflower, Cake (Saffron)	50D26	30B	2D	50	50	0.6	
Safflower, Meal (Saffron)	50B35	30A	1A,1B,1C	50	50	0.6	x

PHONE 319.364.5600 | 800.452.4027 **FAX** 319.364.6449

MATERIALS

TABLE B: Material Characteristics (continued)

MATERIAL	MAT'L CLASS CODE	CONV LOADING	COMPONENT GROUP	WEIGHT (LBS/CF)		MAT'L FACTOR F_M	VERT.*
				MIN	MAX		
Saffron (see Safflower)							
Sal Ammoniac (Ammonium Chloride)	49A45FRS	30A	1A,1B,1C	45	52	0.7	?
Salicylic Acid	29B37U	15	3D	29	29	0.6	
Salt Cake, Dry Coarse (Sodium Sulfate)	85B36TU	30B	3D	85	85	2.1	
Salt Cake, Dry Pulverized (Sodium Sulfate)	75B36TU	30B	3D	65	85	1.7	
Salt, Dry Coarse (Sodium Chloride)	53C36TU	30B	3D	45	60	1.0	x
Salt, Dry Fine (Sodium Chloride)	75B36TU	30B	3D	70	80	1.7	x
Saltpeter (see Potassium Nitrate)							
Sand (Resin Coated) Silica	104B27	15	3D	104	104	2.0	
Sand (Resin Coated) Zircon	115A27	15	3D	115	115	2.3	
Sand Dry Bank (Damp)	120B47	15	3D	110	130	2.8	
Sand Dry Bank (Dry)	100B37	15	3D	90	110	1.7	
Sand Dry Silica	95B27	15	3D	90	100	2.0	
Sand Foundry (Shake Out)	95D37Z	15	3D	90	100	2.6	
Sawdust, Dry	12B45UX	30A	1A,1B,1C	10	13	0.7	
Sea-Coal	65B36	30B	2D	65	65	1.0	
Sesame Seed	34B26	30B	2D	27	41	0.6	x
Shale, Crushed	88C36	30B	2D	85	90	2.0	
Shellac, Powdered or Granulated	31B35P	30A	1B	31	31	0.6	x
Silica Gel, ½" to 3"	45D37HKQU	15	3D	45	45	2.0	
Silica, Flour	80A46	30B	2D	80	80	1.5	
Silicon Dioxide (see Quartz)							
Slag, Blast Furnace Crushed	155D37Y	15	3D	130	180	2.4	
Slag, Furnace Granular, Dry	63C37	15	3D	60	65	2.2	?
Slate, Crushed, ½"	85C36	30B	2D	80	90	2.0	
Slate, Ground, ⅛"	84B36	30B	2D	82	85	1.6	
Sludge, Sewage, Dried	45E47TW	15	3D	40	50	0.8	?
Sludge, Sewage, Dry Ground	50B46S	30B	2D	45	55	0.8	
Soap Detergent	33B35FQ	30A	1A,1B,1C	15	50	0.8	
Soap, Beads or Granules	25B35Q	30A	1A,1B,1C	15	35	0.6	
Soap, Chips	20C35Q	30A	1A,1B,1C	15	25	0.6	
Soap, Flakes	10B35QXY	30A	1A,1B,1C	5	15	0.6	
Soap, Powder	23B25X	45	1A,1B,1C	20	25	0.9	
Soapstone, Talc, Fine	45A45XY	30A	1A,1B,1C	40	50	2.0	
Soda Ash, Heavy (Sodium Carbonate)	60B36	30B	2D	55	65	1.0	
Soda Ash, Light (Sodium Carbonate)	28A36Y	30B	2D	20	35	0.8	x
Sodium Aluminate, Ground	72B36	30B	2D	72	72	1.0	
Sodium Aluminum Fluoride (see Cryolite)							
Sodium Aluminum Sulphate**	75A36	30B	2D	75	75	1.0	
Sodium Bentonite (see Bentonite)							
Sodium Bicarbonate (Baking Soda)	48A25	45	1B	40	55	0.6	?
Sodium Borate (see Borax)							
Sodium Carbonate (see Soda Ash)							
Sodium Chloride (see Salt)							
Sodium Hydroxide (see Caustic Soda)							
Sodium Nitrate	75D25NS	30A	2A,2B	70	80	1.2	
Sodium Phosphate	55A35	30A	1A,1B	50	60	0.9	
Sodium Sulfate (see Salt Cake)							
Sodium Sulfite	96B46X	30B	2D	96	96	1.5	
Sodium, Hydrate (see Caustic Soda)							
Sorghum, Seed (see Kafir or Milo)							
Soybean Meal Hot	40B35T	30A	2A,2B	40	40	0.5	x
Soybean Meal, Cold	40B35	30A	1A,1B,1C	40	40	0.5	x
Soybean, Cake	42D35W	30A	2A,1B,1C	40	43	1.0	x

MATERIALS

TABLE B: Material Characteristics (continued)

MATERIAL	MAT'L CLASS CODE	CONV LOADING	COMPONENT GROUP	WEIGHT (LBS/CF)		MAT'L FACTOR F_M	VERT.*
				MIN	MAX		
Soybean, Cracked	35C36NW	30B	2D	30	40	0.5	x
Soybean, Flake, Extracted, Wet	34C35	30A	1A,1B,1C	34	34	0.8	
Soybean, Flake, Raw	22C35Y	30A	1A,1B,1C	18	25	0.8	
Soybean, Flour	29A35MN	30A	1A,1B,1C	27	30	0.8	x
Soybeans, Whole	48C26NW	30B	3D	45	50	1.0	
Starch	38A15M	45	1A,1B,1C	25	50	1.0	
Steel Turnings, Crushed	125D46WV	30B	3D	100	150	3.0	
Sugar Beet, Pulp, Dry	14C26	30B	2D	12	15	0.9	
Sugar Beet, Pulp, Wet	35C35X	30A	1A,1B,1C	25	45	1.2	
Sugar, Powdered	55A35PX	30A	1B	50	60	0.8	x
Sugar, Raw	60B35PX	30A	1B	55	65	1.5	
Sugar, Refined, Granulated Dry	53B35PU	30A	1B	50	55	1.2	x
Sugar, Refined, Granulated Wet	60C35P	30A	1B	55	65	2.0	
Sulfur, Crushed, ½”	55C35N	30A	1A,1B	50	60	0.8	
Sulfur, Lumpy, 3”	83D35N	30A	2A,2B	80	85	0.8	
Sulfur, Powdered	55A35MN	30A	1A,1B	50	60	0.6	
Sunflower Seed	29C15	45	1A,1B,1C	19	38	0.5	x
Sunflower Seed Flakes	28C35	30A	1A,1B,1C	27	28	0.8	?
Sweet Bran Feed (proprietary to Cargill)	29B45P	30A	1A,1B,1C	21	37	0.6	x
Talcum Powder	55A36M	30B	2D	50	60	0.8	x
Talcum, ½”	85C36	30B	2D	80	90	0.9	
Tanbark, Ground**	55B45	30A	1A,1B,1C	55	55	0.7	
Timothy Seed	36B35NY	30A	1A,1B,1C	36	36	0.6	x
Titanium Dioxide based pigments (powder)	42C36FLO	15	3D	34	50	2.0	
Tobacco, Scraps	20D45Y	30A	2A,2B	15	25	0.8	
Tobacco, Snuff	30B45MQ	30A	1A,1B,1C	30	30	0.9	x
Tricalcium Phosphate	45A45	30A	1A,1B	40	50	1.6	
Triple Sugar Phosphate	53B36RS	30B	3D	50	55	2.0	
Trisodium Phosphate	60C36	30B	2D	60	60	1.7	
Trisodium Phosphate Granular	60B36	30B	2D	60	60	1.7	
Trisodium Phosphate, Pulverized	50A36	30B	2D	50	50	1.6	
Tung Nut Meats, Crushed	28D25W	30A	2A,2B	28	28	0.8	x
Tung Nuts	28D15	30A	2A,2B	25	30	0.7	x
Urea Prills, Coated	45B25	45	1A,1B,1C	43	46	1.2	
Vermiculite, Expanded	16C35Y	30A	1A,1B	16	16	0.5	
Vermiculite, Ore	80D36	30B	2D	80	80	1.0	
Vetch	48B16N	30B	1A,1B,1C	48	48	0.4	x
Walnut Shells, Crushed	40B36	30B	2D	35	45	1.0	x
Wheat	47C25N	45	1A,1B,1C	45	48	0.4	x
Wheat Flour	37A45LP	45	1B	33	40	0.6	x
Wheat, Cracked	43B25N	45	1A,1B,1C	40	45	0.4	x
Wheat, Germ	23B25	45	1A,1B,1C	18	28	0.4	x
White Lead, Dry	88A36MR	30B	2D	75	100	1.0	x
Wood Chips, Screened	20D45VY	30A	2A,2B	10	30	0.6	
Wood Flour	26B35N	30A	1A,1B	16	36	0.4	x
Wood Shavings	12E45VY	30A	2A,2B	8	16	1.5	
Zinc Oxide, Heavy	33A45X	30A	1A,1B	30	35	1.0	
Zinc Oxide, Light	13A45XY	30A	1A,1B	10	15	1.0	x
Zinc, Concentrate Residue	78B37	15	3D	75	80	1.0	

* Products capable of being conveyed vertically. Those listed as "?" typically require a closer look and a modified design.
** Contact Conveyor Eng. & Mfg. for more info.

ENGINEERING

SPECIAL MATERIALS AND APPLICATIONS

When designing a screw conveyor, special considerations must be given to the selection of components if the material conveyed has unusual characteristics. The following information will furnish you with some ideas. Contact your Conveyor Engineering and Manufacturing representative for more assistance.

Abrasive Materials
Abrasive materials can cause excessive wear on conveyor components. They should be carried at slower speeds and at lower trough loads. For very abrasive materials, it may be necessary to use thicker flights and troughs, surface hardeners or special alloy components. (see Abrasion, p.27)

Contaminable Materials
Contaminable materials, such as certain chemicals and food additives, require the use of sealed end bearings and hanger bearings of wood, nylon or other dry operating type. Trough covers should be tightly sealed and easily removable for frequent cleaning and all the internal welds that contact the material may require polishing to eliminate material entrapment.

Degradable Materials
Materials that tend to break up or separate should be carried in large diameter conveyors at very slow speeds to minimize physical agitation of the material.

Extreme Temperatures
Conveyors moving materials at extreme temperatures should be constructed of metal alloys designed to meet these conditions. Highly corrosive materials, combined with high temperatures, require special attention to construction alloys to maximize component life. The use of jacketed troughs may be advisable, wherein a heating or cooling medium may be circulated to keep the conveyed material within safe operating temperatures. Conveyors handling hot materials also experience thermal expansion and will increase in length as the temperature of the trough and screw increases when the hot material begins to be conveyed. (see Thermal Expansion, p.26)

Explosive Materials
The conveyor must be designed with non-sparking and explosion proof components and must be tightly sealed. Where hazardous dusts exist, an exhaust system may be needed for venting.

Fluidizing Materials
When conveying materials that tend to aerate and increase in volume, the conveyor size and speed must be designed on the basis of this larger aerated volume and density. Such materials will often flow through the clearances around the flights. Slow speeds, low clearances and special flight edging will help.

Hygroscopic Materials
Hygroscopic materials readily absorb moisture and tend to become denser and less free flowing. This must be taken into account when determining the size, speed, and horsepower of the conveyor. Tightly sealed conveyors that exclude exterior atmosphere are effective in handling these materials.

Mixing in Transit
When mixing or blending of materials is required, a conveyor screw consisting of ribbon flighting, cut and folded flighting, cut flighting or paddles may be used alone or in any combination to obtain the desired result.

Inclined Conveying
Inclined screw conveyors have a greater horsepower requirement and lower capacity rating than horizontal conveyors. The amount the horsepower increases and capacity decreases depends on the angle of incline and the characteristics of the material being conveyed.

Viscous or Sticky Materials
Ribbon flight conveyors are recommended in order to minimize material build-up. Conveyor Eng. & Mfg. also has a proprietary design available that not only prevents build-up but also allows accurate conveying and metering of sticky materials.

For materials that have these or other special characteristics, consult our engineering department for design recommendations.

ENGINEERING

STEP 3: DETERMINE CAPACITY, CONVEYOR SIZE AND SPEED

For screws with standard, full pitch flights the conveyor's speed is:

$$N = \frac{\text{Required Capacity (ft}^3\text{/hr)}}{\text{1 rpm capacity (ft}^3\text{/hr) from Table D}}$$

N = screw rpm (not greater than the max recommended speed)

For the calculation of conveyor speeds where special types of screws are used, such as short pitch, cut flights, cut and folded flights and/or ribbon flights, an equivalent required capacity must be used, based on factors in **Table C**. The equivalent capacity then is found by multiplying the required capacity by one or more of the capacity factors that are involved.

$$\text{Equivalent Capacity (ft}^3\text{/hr)} = \text{Required Capacity} \times CF_1 \times CF_2 \times CF_3$$

In this case:

$$N = \frac{\text{Equivalent Capacity (ft}^3\text{/hr)}}{\text{1 rpm capacity (ft}^3\text{/hr) from Table D}}$$

See example on p.19

TABLE C: Capacity Factors

SPECIAL SCREW PITCH CAPACITY FACTOR CF_1		
PITCH	**DESCRIPTION**	**CF_1**
Standard (full)	Pitch = Diameter of screw	1.00
Short	Pitch = ⅔ Diameter of screw	1.50
Half	Pitch = ½ Diameter of screw	2.00
Long	Pitch = 1½ Diameter of screw	0.67

SPECIAL SCREW FLIGHT MODIFICATION CAPACITY FACTOR CF_2			
	CONVEYOR LOADING		
TYPE OF FLIGHT	**15%**	**30%**	**45%**
Standard	1.00	1.00	1.00
Cut	1.95	1.57	1.43
Cut & Folded	not rec.	3.75	2.54
Ribbon	1.04	1.37	1.62

SPECIAL SCREW MIXING PADDLE CAPACITY FACTOR CF_3				
STD PADDLES PER PITCH SET AT 45° REVERSE PITCH				
NONE	**1**	**2**	**3**	**4**
1.00	1.08	1.16	1.24	1.32

PHONE 319.364.5600 | 800.452.4027 **FAX** 319.364.6449

ENGINEERING

TABLE D: Conveyor Capacities

PERCENT TROUGH LOAD	SCREW DIAMETER	MAXIMUM RECOMMENDED RPM	CAPACITY (FT^3/HR) at MAX RPM	CAPACITY (FT^3/HR) per RPM
15% 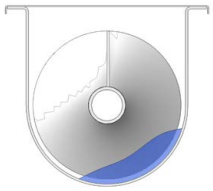	6	60	45	0.8
	9	55	150	2.7
	12	50	325	6.5
	14	50	520	10.4
	16	45	700	15.6
	18	45	1,010	22.5
	20	40	1,250	31.2
	24	40	2,180	54.6
	30	30	3,152	105.0
	36	20	3,597	184.0
30% A 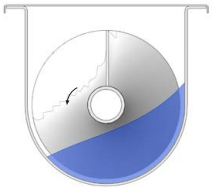	6	120	180	1.5
	9	100	545	5.5
	12	90	1,160	12.9
	14	85	1,770	20.8
	16	80	2,500	31.2
	18	75	3,380	45.0
	20	70	4,370	62.5
	24	65	7,100	109.0
	30	50	10,506	210.0
	36	35	12,593	369.0
30% B 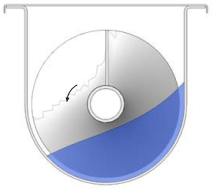	6	60	90	1.5
	9	55	295	5.7
	12	50	646	12.9
	14	47	696	14.8
	16	44	1,382	31.4
	18	41	1,834	44.7
	20	38	2,361	62.1
	24	36	3,928	109.1
	30	27	5,673	210.0
	36	19	6,836	360.0
45% 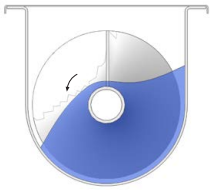	6	165	368	2.2
	9	155	1,270	8.2
	12	145	2,820	19.4
	14	140	4,370	31.2
	16	130	6,060	46.7
	18	120	8,120	67.6
	20	110	10,300	93.7
	24	100	16,400	164.0
	30	70	22,062	315.0
	36	40	21,587	540.0
95% 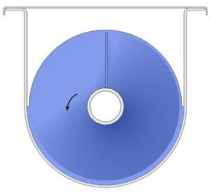 (Shown with shroud mtd. above screw) see p.92 for more on Feeder Screws	6	300*	1,415	4.7
	9	275*	4,832	17.6
	12	255*	10,760	42.0
	14	240*	16,342	68.0
	16	220*	22,280	101.0
	18	210*	30,529	145.0
	20	190*	37,385	196.0
	24	170*	58,858	346.0
	30	115*	76,519	665.0
	36	70*	79,754	1,139.0

* Static balancing of screws typically necessary to operate at these max speeds.

ENGINEERING

TABLE E: Maximum lump size for standard screws

SCREW DIA (INCHES)	PIPE OD (INCHES)	RADIAL CLEARANCE (INCHES)	CLASS 1 10% LUMPS MAX LUMP SIZE (IN)	CLASS 2 25% LUMPS MAX LUMP SIZE (IN)	CLASS 3 95% LUMPS MAX LUMP SIZE (IN)
6	2 3/8	2 5/16	1 1/4	3/4	1/2
9	2 3/8	3 13/16	2 1/4	1 1/2	3/4
9	2 7/8	3 9/16	2 1/4	1 1/2	3/4
12	2 7/8	5 1/16	2 3/4	2	1
12	3 1/2	4 3/4	2 3/4	2	1
12	4	4 1/2	2 3/4	2	1
14	3 1/2	5 3/4	3 1/4	2 1/2	1 1/4
14	4	5 1/2	3 1/4	2 1/2	1 1/4
14	4 1/2	5 1/4	3	2	1
16	4	6 1/2	3 3/4	2 3/4	1 1/2
16	4 1/2	6 1/4	3 3/4	2 3/4	1 1/2
16	5 9/16	5 23/32	3 1/4	2 1/4	1 1/4
18	4	7 1/2	4 1/4	3	1 3/4
18	4 1/2	7 1/4	4 1/4	3	1 3/4
18	5 9/16	6 23/32	3 3/4	2 1/2	1 1/2
20	4	8 1/2	4 3/4	3 1/2	2
20	4 1/2	8 1/4	4 3/4	3 1/2	2
20	5 9/16	7 23/32	4 1/4	3	1 1/2
24	4 1/2	10 1/4	6	3 3/4	2 1/2
24	5 9/16	9 23/32	5 1/2	3 3/4	2

MATERIAL LUMP SIZE LIMITATION

The size of a screw conveyor not only depends on the capacity required, but also on the size and proportion of lumps in the material to be handled. The size of a lump is determined by the maximum dimension it measures around the center of the material. The character of the material lump classifies the material in one of three classes:

Class 1: A mixture of lumps and fine particles of which not more than 10% are lumps ranging from maximum size to one half of the maximum; and 90% are lumps smaller than one half of the maximum size. **Class Ratio = 1.75**

Class 2: A mixture of lumps and fine particles of which not more than 25% are lumps ranging from maximum size to one half of the maximum; and 75% are lumps smaller than one half of the maximum size. **Class Ratio = 2.50**

Class 3: A mixture of lumps only of which 95% or more are lumps ranging from maximum size to one half of the maximum size; and 5% or less are lumps less than one tenth of the maximum size. **Class Ratio = 4.50**

The allowable size of a lump in a screw conveyor is a function of the radial clearance between the outside diameter of the central pipe and the radius of the inside of the screw trough **(See Figure 1)**, as well as the proportion of lumps in the mix. **Table E** shows the recommended maximum lump size for each customary screw diameter and the three lump classes.

See example on p.19

For nonstandard screw dia and pipe combinations:

Required Radial Clearance (inches) =
Class Ratio x Product Max Lump Size (inches)

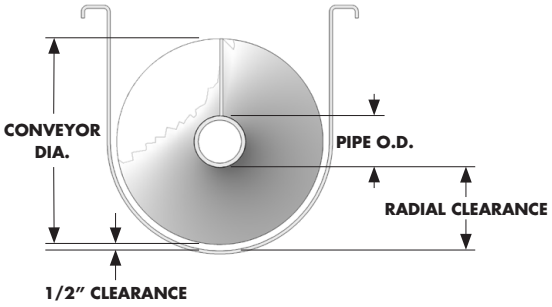

FIGURE 1

PHONE 319.364.5600 | 800.452.4027 **FAX** 319.364.6449

ENGINEERING

EXAMPLE: CONVEYOR SIZE AND SPEED

A standard pitch screw conveyor is to transport 108,000 lbs. per hour of a material weighing 60 lbs. per cubic feet with a 30% A type cross-sectional loading. A further requirement is that the conveyor is to mix the material in transit by means of a full pitch, cut flight screw with one 45° reverse pitch mixing paddle per pitch.

The required capacity is $\frac{108{,}000}{60}$ **= 1800 ft³/hr**

Due to the inefficiency of a conveyor screw with cut flights and mixing paddles, an equivalent capacity will have to be calculated from the appropriate capacity factors.

Equivalent capacity = 1800 x 1.00 x 1.57 x 1.08 = 3052 ft³/hr

Now referring to the Capacity **Table D** for a 30% A loading, an 18 inch screw at maximum RPM will have slightly more than the equivalent capacity and will also have a capacity of 45.0 cubic feet per hour at 1 RPM.

$$N = \frac{3052}{45.0} = 68 \text{ RPM}$$

LUMP SIZE CHECK:

If the lump size distribution of the material being conveyed is 4" x 2" (9%), 2" x 1" (41%), 1" x 3/8" (22%), <3/8" (28%) then it falls under Class 1 from **Table E**. The ratio R then is 1.75 and the required radial clearance is:

Req'd Radial Clearance = Ratio x Product Max Lump Size
= 1.75 x 4
= 7"

A quick check of **Table E** shows that a screw of at least 18" dia is recommended due to lump size.

RETENTION TIME:

If 40 seconds of mixing time is desired in the previous example then the length of the screw to retain the material for the specified mixing time (retention time) is calculated as follows:

$$L = \frac{\text{N x Length one pitch (inches) x Time (minutes)}}{12}$$

$$L = \frac{79 \times 12 \times 0.666}{12} = 53 \text{ feet}$$

This is the actual mixing length of screw. The overall screw and trough length will be a bit more to provide space to bring the material into the trough and to discharge it from the trough without reducing the mixing time specified.

STEP 4: CALCULATING HORSEPOWER (HORIZONTAL CONVEYING)

The horsepower required to operate a horizontal screw conveyor is based on proper installation, uniform and regular feed rate to the conveyor and other design criteria. The horsepower requirement is the total of the horsepower to overcome the friction (HP_f) of the conveyor components and the horsepower to transport the material (HP_m) multiplied by the overload factor (F_o) and divided by the total drive efficiency (e), or:

FRICTION HP

$$HP_f = \frac{LNF_dF_b}{1{,}000{,}000}$$

MATERIAL HP

$$HP_m = \frac{CLDF_mF_fF_p}{1{,}000{,}000}$$

TOTAL HP

$$HP_{total} = \frac{(HP_f + HP_m)\,F_o}{e}$$

The following factors determine the horsepower requirement of a screw conveyor operating under these conditions.

L = Total length of conveyor, feet
N = Operating speed, rpm
C = Capacity required, cubic feet per hour
D = Density of material as conveyed*, lb/CF (See **Table B**)
F_d = Conveyor diameter HP factor (See **Table L**)
F_b = Hanger bearing HP factor (See **Table M**)
F_m = Material factor (See **Table B**)
F_f = Flighting modification HP factor (See **Table J**)
F_p = Paddle HP factor (See **Table K**)
F_o = Overload HP factor (See **Table H**)
e = Drive effic. (expressed as a decimal) (See **Table G1** or **G2**)

It is generally accepted practice that most power transmitting elements of a screw conveyor be sized and selected to safely handle the rated motor horsepower. If, for example, a screw conveyor requires 3.5 horsepower as determined by the above formula, a 5 horsepower motor must be used and it is desirable that all the power transmitting elements be capable of safely handling the full 5 horsepower.

See calculation example on p.22

*Some materials, such as cement, will aerate when conveyed making their apparent density much lower than when static. This is factored into the densities shown in **Table B**.

WARNING: This calculation does not include extra HP required for inclined conveyors, head loads above conveyor inlets, drives operated with VFDs or materials with difficult startup characteristics (Ex: those that harden during shutdown periods). Consult Conveyor Engineering in these cases.

ENGINEERING

DRIVE EFFICIENCIES

The efficiencies of various speed reduction mechanisms are listed in **Table G1 & G2**. These efficiencies represent conservative figures for the components of the drivetrain taking into account possible slight misalignments, uncertain maintenance and the effects of temperature change. While there are variations in the efficiency of different manufacturer's product, the data given in the tables will cover most discrepancies.

Appropriate service factors for individual power transmission components should be determined from the manufacturer's catalogs, taking into account the intended service, hours of operation and the type of operating conditions.

TABLE G1*: Mechanical Efficiencies (typical complete drive arrangements)

			APPROX. EFFICIENCY "e"*
Direct Coupled In-line Drive	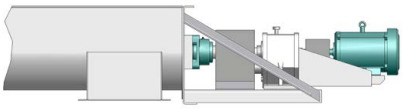	Motor, reducer & conveyor drive shaft are mounted in-line and direct-coupled together. Typically supported by drive base attached to floor or conveyor end plate. Best configuration for longer component life of larger conveyors.	**0.94**
"Screw Conveyor" Drive	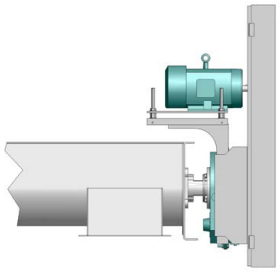	Reducer is mounted on trough end and has it's own drive shaft which is directly connected to conveyor screw. Reducer includes integral thrust bearing and seal. Separate drive shaft, end bearing, and seal are not required. Motor is connected via V-belt and may be mounted at top, either side or below.	**0.88**
Shaft Mount Drive	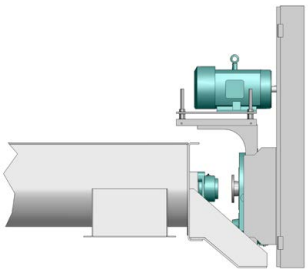	Similar to "Screw Conveyor" drive above except bearing, seal and drive shaft are not included with reducer. Rather, reducer mounts onto extended version of standard conveyor drive shaft. This allows for use of a variety of bearings and seals.	**0.88**
Gear Motor Reducer or Helical Reducer with Chain & Sprockets	(view from above) 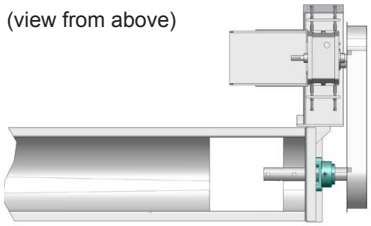	Integral motor-reducer or scoop mount motor with chain drive to conveyor drive shaft. Usually mounted to side of trough by means of an adapter plate.	**0.85**

* Drive efficiencies from either Table G1 (complete drive configurations) or G2 (individual components) may be used for horsepower calculations. If using G2, multiply individual component efficiencies together to obtain total drive efficiency.

TABLE G2*: Mechanical Efficiencies (individual components)

	APPROX. EFFICIENCY "e"*
V-belts and Sheaves	0.94
Precision Roller Chain on Cut Tooth Sprockets, Open Guard	0.93
Precision Roller Chain on Cut Tooth Sprockets, Oil Tight Casing	0.94
Single Reduction Helical Gear Shaft Mounted Speed Reducers and Screw Conveyor Drives	0.95
Double Reduction Helical Gear Shaft Mounted Speed Reducers and Screw Conveyor Drives	0.94
Triple Reduction Helical Gear Shaft Mounted Speed Reducers and Screw Conveyor Drives	0.93
Low Ratio (up to 20:1 range) Enclosed Worm Gear Speed Reducers	0.90
Medium Ratio (20:1 to 60:1 range) Enclosed Worm Gear Speed Reducers	0.70
High Ratio (over 60:1 to 100:1 range) Enclosed Worm Gear Speed Reducers	0.50
Cut Tooth Miter or Bevel Gear, Enclosed Countershaft Box Ends	0.93
Cut Tooth Spur Gears, Enclosed, for Each Reduction	0.93
Cut Tooth Miter or Bevel Gear Open Type Countershaft Box Ends	0.90
Cut Tooth Spur Gears, Open for Each Reduction	0.90
Cast Tooth Spur Gears, Open for Each Reduction	0.85

* Drive efficiencies from either Table G1 (complete drive configurations) or G2 (individual components) may be used for horsepower calculations. If using G2, multiply individual component efficiencies together to obtain total drive efficiency.

TABLE H: Overload HP Factor F_o

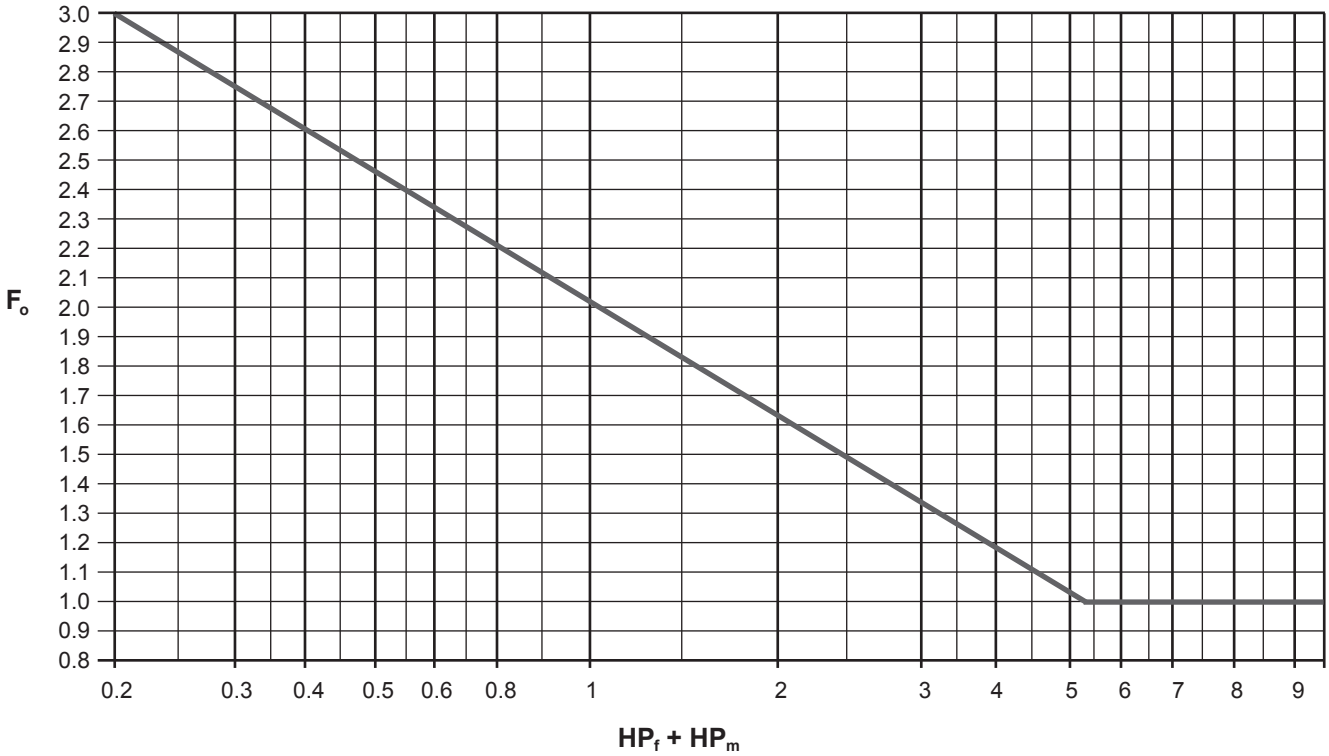

1. Trace the value of ($HP_f + HP_m$) vertically to the diagonal line
2. From there, move across to the left to find the F_o value on the vertical axis

If ($HP_f + HP_m$) is ≥ 5.2 then $F_o = 1.0$
If ($HP_f + HP_m$) is < 5.2 then $F_o = \text{Ln}(HP_f + HP_m) \times -0.6115 + 2.024$

ENGINEERING

EXAMPLE: HORSEPOWER CALCULATION (STEP 4, p.19**)**

Material:	Corn Germ
Density:	21 lbs per cubic foot
Required capacity:	2000 cubic foot per hour
Length:	48 foot
Flighting:	Standard, full pitch ribbon flights
Hanger bearings:	Bronze
Drive type:	Double reduction shaft mount reducer with V-belts and sheaves

Referring to the material **Table B**, the material code is 21B35JZ, Conveyor loading is 30A, the component group is 1A-1B-1C and the material factor is 0.4. We also need to reference **Table C** due to the special flighting requirement.

Equivalent Capacity (ft^3/hr) = Req'd Capacity x CF_1 x CF_2 x CF_3
= 2000 x 1 x 1.37 x 1
= 2740 (ft^3/hr)

From **Table D**, an 18" conveyor would be selected from the 30%A loading to achieve the 2740 cubic feet per hour requirement within the recommended rpm range. At 1 rpm this conveyor will move 45 cubic feet. Therefore, the speed of the conveyor would be:

$$N = \frac{\text{Equivalent Capacity (ft}^3\text{/hr)}}{\text{Capacity (ft}^3\text{/hr) at 1 rpm}} = \frac{2740}{45} = 60.9 \text{ rpm}$$

The resulting horsepower would be:

$$HP_f = \frac{LNF_dF_b}{1{,}000{,}000} = \frac{48 \times 60.9 \times 135 \times 1.7}{1{,}000{,}000} = 0.671$$

$$HP_m = \frac{CLDF_mF_fF_p}{1{,}000{,}000} = \frac{2000 \times 48 \times 21 \times 0.4 \times 1.14 \times 1}{1{,}000{,}000} = 0.919$$

Use actual Required Capacity above (not Equivalent Capacity)

From **Table H or the formula below it**, using $HP_f + HP_m = 1.590$, then $F_o = 1.740$, thus:

$$HP_{total} = \frac{(HP_f + HP_m)\,F_o}{e} = \frac{(0.671 + 0.919)\,1.740}{.94 \times .94^{**}} = 3.14HP$$

A 5.0 or 7.5 HP drive could be used depending on the application. More conservative sizes may handle unforeseen circumstances and accommodate future increased capacities.

** Could use either .88 from **Table G1** or .94 x .94 from **Table G2** to get same result

WARNING: This calculation doesn't include extra HP required for inclined conveyors, head loads above conveyor inlets, drives operated with VFDs or materials with difficult startup characteristics. Consult Conveyor Engineering in these cases.

TABLE J: Flight Modification HP Factor, F_f

TYPE OF FLIGHTING	CONVEYOR LOADING			
	15%	30%	45%	95%
Standard	1.00	1.00	1.00	1.00
Cut	1.10	1.15	1.20	1.30
Cut & Folded	NR	1.50	1.70	2.20
Ribbon	1.05	1.14	1.20	NR

TABLE K: Paddle HP Factor, F_p

STD PADDLES PER PITCH SET AT 45° REVERSE PITCH				
NONE	1	2	3	4
1.00	1.29	1.58	1.87	2.16

TABLE L: Diameter HP Factor

SCREW DIA.	F_d	SCREW DIA.	F_d
6	18	24	235
9	31	30	360
10	37	36	512
12	55	42	720
14	78	48	940
16	106	54	1200
18	135	60	1500
20	165		

TABLE M: Hanger Bearing HP Factor

COMPONENT GROUP	BEARING TYPE	FACTOR F_b
A	Ball	1.0
B & C	Babbitt	1.7
	Bronze	1.7
	Bronze (oil impregnated)	1.7
	Bronze w/Graphite Plugs	1.7
	Canvas Based Phenolic	1.7
	Ertalyte	2.5
	Gatke	1.7
	Melamine	3.5
	Nylon/Nylatron GS	2.0
	Plastic Resin	2.0
	Ryertex	1.7
	Teflon	2.0
	UHMW	2.0
	Wood (oil impregnated)	1.7
D Req's hardened cplg shaft	Chilled Hard Iron	4.4
	Hardened Alloy Sleeve	4.4
	Stellite	4.4

PHONE 319.364.5600 | 800.452.4027 **FAX** 319.364.6449

STEP 5: DETERMINE SIZE OF COMPONENTS

To properly select the screw conveyor components for a particular duty, they are broken down into three components groups that relate to both the material classification code and to the screw size, pipe size, type of bearings and trough thickness. The following service tables are a guide to proper selection of the appropriate component group for the material being conveyed. Other components are then selected from the Components Section of this catalogue to suit the physical layout of the conveyor.

TABLE N: Component Groups

SCREW DIA (INCHES)	SHAFT SIZE DIA	BOLTS PER COUPLING	SECTIONAL SCREW FLIGHT THICKNESS*	TROUGH THICKNESS	COVER THICKNESS
Light Duty Service: Component Groups 1A, 1B & 1C					
6	1 ½	2-bolt	10 ga	16 ga	16 ga
9	1 ½	2-bolt	10 ga	14 ga	14 ga
9	2	2-bolt	10 ga	14 ga	14 ga
10	1 ½	2-bolt	10 ga	14 ga	14 ga
12	2	2-bolt	3/16	12 ga	14 ga
12	2 7/16	2-bolt	3/16	12 ga	14 ga
14	2 7/16	2-bolt	3/16	12 ga	14 ga
16	3	2-bolt	3/16	10 ga	14 ga
18	3	2-bolt	3/16	10 ga	12 ga
20	3	2-bolt	3/16	10 ga	12 ga
24	3 7/16	2-bolt	¼	10 ga	12 ga
Standard Duty Service: Component Groups 2A, 2B, 2C & 2D					
6	1 ½	2-bolt or 3-bolt	10 ga	14 ga	14 ga
9	2	2-bolt or 3-bolt	3/16	10 ga	14 ga
10	2	2-bolt or 3-bolt	3/16	10 ga	14 ga
12	2 7/16	2-bolt or 3-bolt	3/16	3/16	14 ga
12	3	2-bolt or 3-bolt	¼	3/16	14 ga
14	2 7/16	2-bolt or 3-bolt	3/16	3/16	14 ga
14	3	2-bolt or 3-bolt	¼	3/16	14 ga
16	3	2-bolt or 3-bolt	¼	3/16	14 ga
18	3	2-bolt or 3-bolt	¼	3/16	12 ga
18	3 7/16	2-bolt or 3-bolt	¼	3/16	12 ga
20	3	2-bolt or 3-bolt	¼	3/16	12 ga
20	3 7/16	2-bolt or 3-bolt	¼	3/16	12 ga
24	3 7/16	2-bolt or 3-bolt	¼	3/16	12 ga
30	3 15/16	2-bolt or 3-bolt	⅜	3/16	12 ga
36**	4 7/16	2-bolt or 3-bolt	⅜	3/16	10 ga
Heavy Duty Service: Component Groups 3A, 3B & 3D					
6	2	3-bolt	3/16 or ¼	10 ga	14 ga
9	2	3-bolt	¼	3/16	14 ga
10	2	3-bolt	¼	3/16	14 ga
12	2 7/16	3-bolt	¼ or ⅜	3/16 or ¼	14 or 12 ga
12	3	3-bolt	⅜ or ½	3/16 or ¼	14 or 12 ga
14	3	3-bolt	⅜ or ½	3/16 or ¼	14 or 12 ga
16	3	3-bolt	⅜ or ½	3/16 or ¼	14 or 12 ga
16	3 7/16	3-bolt	⅜ or ½	3/16 or ¼	14 or 12 ga
18	3 7/16	3-bolt	⅜ or ½	¼	12 or 10 ga
20	3 7/16	3-bolt	⅜ or ½	¼	12 or 10 ga
20	3 15/16	3-bolt	⅜ or ½	¼	12 or 10 ga
24	3 7/16	3-bolt	⅜ or ½	¼	12 or 10 ga
24	3 15/16	3-bolt	⅜ or ½	¼	10 ga
30	4 7/16	3-bolt	⅜ or ½	¼	10 ga
36**	4 15/16	3-bolt	⅜ or ½	¼	10 ga

* Helicoid screws are also available for light duty service but sizes are limited. See p.36

** Larger sizes available. Contact Conveyor Eng & Mfg for more information.

ENGINEERING

STEP 6: CHECK TORSIONAL RATINGS OF COMPONENTS

Screw conveyors are limited in overall length and size by the amount of torque that can be safely transmitted through the components selected. The shafts, bolts and pipe all need to be sized appropriately for the drive horsepower and rpm. **Table Q** combines the various torsional ratings of bolts, couplings and pipe so that it is easy to compare all stressed parts of standard conveyors. The table conforms to Conveyor Eng. & Mfg. design standards (often more conservative than CEMA standards).

TORSIONAL RATING

Reading across the table, the lowest torsional rating in any combination will be the limiting component. The torque produced (TQ) from the conveyor's drive is a function of the size of the motor (HP) and the speed of the conveyor (rpm).

$$\text{Torque, TQ} = \frac{63{,}025 \times \text{HP}}{\text{rpm}}$$

(Assumes motor is operated at full freq., not turned down with VFD)

EXAMPLE: COMPONENT OPTIONS BASED ON TORSIONAL LIMITS

A 20 hp motor driving a conveyor at 56 rpm will produce:

TQ = (63,025 x 20) / 56 = 22,509 inch-lbs of torque

We can now use this torque value to check the selected components of the conveyor using **Table Q**. This table shows the maximum torque (based on industry standard stress limits) that each load bearing component can handle for each shaft diameter and pipe size combination.

In this case, you can rule out all components with a max torque level below 22,509 in-lbs. Our options are:

Shafts: All shaft materials listed are acceptable as long as the diameter is 3" or larger.

Pipe: All of the pipe options available with these shafts sizes are acceptable. Note that some result in thin walled internal collars/bushings (see p.71) which more easily deform when welding heat is applied during the manufacturing process therefore should be avoided if possible.

Coupling Bolts (based on shear stress): 3-bolt couplings are required with 3" shafts. 2-bolt couplings are acceptable with shafts 3-7/16" dia or larger.

Coupling Bolts (based on load bearing stress): Bolt pads are required with 3" 2-bolt shafts unless 4" pipe or larger is used. Bolt pads are not required if 3-bolt couplings are used.

Example Summary:
Many component options remain within design limits. The best depends on which of the following variables is most important:

Cost – Depending on current raw material costs, the lowest cost combination is likely 3" 2-bolt shafts with 4" clad pipe and bolt pads. (Bolt pads (see p.41) are an inexpensive but significant way to increase the load bearing limit of coupling bolts.)

Design – If you want to make the coupling bolts the limiting component while still keeping relatively high safety factors, 3-7/16" 3-bolt shafts with 4" or 5" clad pipe would be a good long term choice. If stainless steel components with a design safety factor of 2.0 or better is required then 3-15/16" 3-bolt shafts with 6" pipe or larger would be necessary.

Notes:
-It is sometimes possible to bring smaller and less expensive components within design limits by increasing the screw rpm. If the conveyor has a metered feed, then required HP will increase only slightly (due to friction) therefore TQ will decrease. The only negative result will be a small increase in component wear due to the higher speed. If the conveyor is flood feed, increasing rpm won't help because the required HP will increase proportionally.

-As noted at the bottom of **Table Q,** shaft torque limits listed can be increased 10% if a direct coupled drive is used (eliminates bending stress load imposed on drive shaft).

Warning: The torsional limits in **Table Q** assume standard conditions and designs. Overhung loads, axial loads and bending moments induced by long screws, long shafts, pedestal bearings, material head loads, inclines, offset reducers and other unusual loading conditions are not represented in these calculations. Contact Conveyor Eng. & Mfg. for final sizing of components.

PHONE 319.364.5600 | 800.452.4027 **FAX** 319.364.6449

ENGINEERING

COMPONENT TORQUE LIMITS

TABLE Q: Maximum Component Torque (inch-lbs.) See previous page for further details.

		SHAFTS*		PIPE	COUPLING BOLTS					
					SHEAR		LOAD BEARING			
		MATERIAL		MAT'L			w/o PADS	w/o PADS	w/ PADS	w/ PADS
SHAFT DIA	PIPE	SS/1018**	4140	SS/CS***	2-BOLT	3-BOLT	2-BOLT	3-BOLT	2-BOLT	3-BOLT
1-1/2"	2" sch 40	2,565	3,552	7,288	3,829	5,743	5,016	7,524	16,641	24,962
1-1/2"	2" sch 80	2,565	3,552	9,501	3,829	5,743	5,016	7,524	16,641	24,962
1-1/2"	2-1/2" sch 40	2,565	3,552	13,832	3,829	5,743	8,945	13,417	22,070	33,105
1-1/2"	2-1/2" sch 80	2,565	3,552	17,402	3,829	5,743	8,945	13,417	22,070	33,105
2"	2-1/2" sch 40	6,354	8,798	13,832	7,977	11,965	7,888	11,833	26,170	39,254
2"	2-1/2" sch 80****	6,354	8,798	17,402	7,977	11,965	7,888	11,833	26,170	39,254
2"	3" sch 40	6,354	8,798	22,413	7,977	11,965	15,345	23,018	35,970	53,955
2"	3" sch 80	6,354	8,798	28,929	7,977	11,965	15,345	23,018	35,970	53,955
2"	3" 80/10 clad	6,354	8,798	42,631	7,977	11,965	18,598	27,896	40,123	60,184
2-7/16"	3" sch 40	12,558	17,388	22,413	9,722	14,582	11,689	17,534	33,955	50,933
2-7/16"	3" sch 80	12,558	17,388	28,929	9,722	14,582	11,689	17,534	33,955	50,933
2-7/16"	3" 80/10 clad	12,558	17,388	42,631	9,722	14,582	14,942	22,413	38,107	57,161
2-7/16"	3-1/2" sch 40	12,558	17,388	31,120	9,722	14,582	18,709	28,063	42,850	64,274
2-7/16"	3-1/2" sch 80	12,558	17,388	40,821	9,722	14,582	18,709	28,063	42,850	64,274
2-7/16"	3-1/2" 80/10 clad	12,558	17,388	58,736	9,722	14,582	22,411	33,617	47,452	71,178
3"	3-1/2" sch 40	23,693	32,806	31,120	17,230	25,845	15,537	23,306	47,037	70,556
3"	3-1/2" sch 80****	23,693	32,806	40,821	17,230	25,845	15,537	23,306	47,037	70,556
3"	3-1/2" 80/10 clad	23,693	32,806	58,736	17,230	25,845	19,980	29,970	52,560	78,840
3"	4" sch 40	23,693	32,806	41,788	17,230	25,845	25,085	37,627	58,835	88,252
3"	4" sch 80	23,693	32,806	55,527	17,230	25,845	25,085	37,627	58,835	88,252
3"	4" 80/10 clad	23,693	32,806	78,223	17,230	25,845	30,067	45,100	64,897	97,345
3-7/16"	4" sch 40	35,490	49,140	41,788	26,872	40,307	21,857	32,785	63,529	95,293
3-7/16"	4" sch 80****	35,490	49,140	55,527	26,872	40,307	21,857	32,785	63,529	95,293
3-7/16"	4" 80/10 clad	35,490	49,140	78,223	26,872	40,307	27,670	41,504	70,601	105,902
3-7/16"	5" sch 40	35,490	49,140	70,791	26,872	40,307	49,884	74,826	97,134	145,701
3-7/16"	5" sch 80	35,490	49,140	96,539	26,872	40,307	49,884	74,826	97,134	145,701
3-7/16"	5" 80/10 clad	35,490	49,140	135,502	26,872	40,307	57,890	86,834	106,547	159,820
3-7/16"	6" sch 40	35,490	49,140	110,445	26,872	40,307	83,838	125,757	136,666	205,000
3-7/16"	6" sch 80	35,490	49,140	158,907	26,872	40,307	83,838	125,757	136,666	205,000
3-7/16"	6" 80/10 clad	35,490	49,140	214,041	26,872	40,307	93,339	140,008	147,574	221,361
3-15/16"	6" sch 40	50,538	69,975	110,445	50,881	76,322	95,253	142,879	166,550	249,824
3-15/16"	6" sch 80	50,538	69,975	158,907	50,881	76,322	95,253	142,879	166,550	249,824
3-15/16"	6" 80/10 clad	50,538	69,975	214,041	50,881	76,322	107,466	161,198	180,572	270,857
3-15/16"	8" sch 40	50,538	69,975	218,518	50,881	76,322	198,086	297,128	282,882	424,324
3-15/16"	8" sch 80	50,538	69,975	318,681	50,881	76,322	198,086	297,128	282,882	424,324
3-15/16"	8" 80/10 clad	50,538	69,975	413,200	50,881	76,322	214,036	321,055	300,656	450,984
4-7/16"	6" sch 40	72,966	101,030	110,445	70,793	106,190	90,104	135,156	173,073	259,609
4-7/16"	6" sch 80	72,966	101,030	158,907	70,793	106,190	90,104	135,156	173,073	259,609
4-7/16"	6" 80/10 clad	72,966	101,030	214,041	70,793	106,190	103,674	155,511	188,653	282,979
4-7/16"	8" sch 40	72,966	101,030	218,518	70,793	106,190	204,363	306,544	302,332	453,497
4-7/16"	8" sch 80	72,966	101,030	318,681	70,793	106,190	204,363	306,544	302,332	453,497
4-7/16"	8" 80/10 clad	72,966	101,030	413,200	70,793	106,190	222,086	333,129	322,080	483,120
4-15/16"	8" sch 40	97,404	119,882	218,518	113,429	170,143	223,985	335,977	346,047	519,071
4-15/16"	8" sch 80	97,404	119,882	318,681	113,429	170,143	223,985	335,977	346,047	519,071
4-15/16"	8" 80/10 clad	97,404	119,882	413,200	113,429	170,143	245,250	367,875	369,743	554,614

* Shaft torque limits listed can be increased 10% if a direct coupled drive is used (eliminates bending stress load imposed on drive shaft)

** 304SS, 316SS and 1018 carbon steel shafting (torque limits are equal)

*** 304SS, 316SS and standard carbon steel pipe (torque limits are equal)

**** Thin walled bushing. Consult Conveyor Eng. & Mfg

ENGINEERING

STEP 7: CHECK SCREW DEFLECTION, SHAFT END ANGLE, CONVEYOR THERMAL EXPANSION AND ABRASION

SCREW DEFLECTION & SHAFT END ANGLE

The amount of deflection the screw pipe experiences due to the screw weight is directly proportional to its useful life. Deflection of a standard length screw is rarely a problem. However, if longer than standard screw sections are to be used without intermediate hanger bearings, care should be taken to prevent the screw flights from contacting the trough. Deflection should be held to a minimum to increase the useful life of the screw.

$$D = \frac{WL^3}{76.8EI}$$

D = Deflection at mid span in inches (horizontal screw)
W = Total screw weight in pounds (see p.34)
L = Screw length in inches + "H" from p.29
E = Modulus of Elasticity (2.9 x 10^7 psi for carbon & stainless)
I = Moment of Inertia of pipe (see **Table S** below)

Screws with minimal deflection can still have excessive shaft end angle (typically shorter, heavier screws). The end angle is the amount the shafts attempt to angle upward due to screw deflection. Excessive end angle can significantly reduce shaft and bearing life.

Shaft End Angle (degrees) = 180/π x 3.2D/L = 183D/L

TABLE R: Deflection and Shaft End Angle Limits, SS Screws

SITUATION	MAX DEFLECTION*	MAX END ANGLE*	
		2-BOLT	3-BOLT
Standard SS setup**	0.125"	0.200º	0.150º
Screw conv. type drive	0.100"	0.150º	0.135º
Weld-in shafts	0.100"	0.150º	0.135º
Drive on inlet end	0.100"	0.150º	0.135º
Flanged shafts	0.100"	0.150º	0.135º
Tight collar tolerances	0.100"	0.110º	0.135º
Double end bearings	0.100"	0.150º	0.135º

* Use as "rule of thumb" only. Consult CEMC for more thorough analysis.
** Std stainless setup: does not include any of the situations listed below it.
Note: all limits can be increased by 20% for carbon steel screws

EXAMPLE: DEFLECTION & SHAFT END ANGLE

Determine deflection & shaft end angle for a 20SS724 3-bolt screw that is 14'8" long and mounted on 4" sched 40 pipe.

W = 542 lbs
L = 176 + 4 inches
E = 2.9 x 10^7 psi
I = 7.23 inches^4

$$D = \frac{542 \times 180^3}{76.8 \times (2.9\times10^7) \times 7.23} = \underline{0.196"}$$

Shaft End Angle = 183 x 0.196 / 180 = <u>0.199º</u>

Both exceed the limits in **Table R.** Pipe size should be increased, the span length reduced or both. Consult Conveyor Eng. for help.

CONVEYOR THERMAL EXPANSION

When longer screw conveyors are required to convey hot or cold materials, thermal expansion must be properly accounted for. The recommended general practice is to provide trough end supports which will allow expansion or contraction movement. The drive end of the conveyor is typically fixed allowing the remainder of the trough to move. If fixed intermediate inlets or discharge spouts are required, expansion type troughs should be used.

The screw and the trough may expand or contract at different rates. In this case expansion hangers are generally recommended. The trough end opposite the drive should incorporate an expansion type ball or roller bearing which will safely provide sufficient movement.

The change in screw conveyor length is calculated as:

$$\Delta L = L (t_1 - t_2) C$$

ΔL = increment of change in length (inches)
L = Overall conveyor length (inches)
t_1 = Upper limit of temperature, (°F)
t_2 = Lower limit of temperature, (°F)
C = Coefficient of linear expansion, per °F

The coefficients of expansion by material type:

Carbon steel (hot rolled) = 6.33 x 10^{-6}/°F
Stainless steel (304/316) = 9.6 x 10^{-6}/°F
Aluminum = 12.8 x 10^{-6}/°F

EXAMPLE: THERMAL EXPANSION

A 45' lg, stainless steel conveyor at an ambient temperature of 60° F is fed with product that brings it up to 260° F:

t_1 = 260° F
t_2 = 60° F
$t_1 - t_2$ = 200° F
L = 45' x 12" = 540 inches
C = 9.6 x 10^{-6}/°F

ΔL = (540")(200° F)(9.6 x 10^{-6}/°F) = 1.04 inches

Consult our engineering department for thermal expansion applications, especially those over 1".

TABLE S: Moment of Inertia, Pipe I = (OD^4 - ID^4) * 0.0491

NOMINAL PIPE SIZE	MOMENT OF INERTIA		
	SCHED 40	SCHED 80	SCHED 80 CLAD*
2	0.667	0.868	N/A
2 ½	1.53	1.92	N/A
3	3.02	3.89	6.13
3 ½	4.79	6.28	9.57
4	7.23	9.61	14.3
5	15.2	20.7	30.4
6	28.1	40.5	56.8
8	72.5	106	141
10	161	212	280

* Sched 80 carbon pipe clad w/sched 10 SS pipe or equiv. See p.34

ENGINEERING

ABRASION

Excessive wear conditions can result in high maintenance and replacement costs. Earlier design steps using Tables B & D take this into consideration in general terms. You can get a more detailed view of your abrasion situation with the following calculations:

Screw Tip Speed (ft/min) = screw dia. x rpm x π / 12

Trough Surface Speed (ft/min) = screw pitch x rpm x (1 - % loss*) / 12

* Percentage loss due to modified flights, reverse pitch paddles, incline, etc.

Screw Abrasion Score = screw tip speed x (product abrasiveness rating** - 4) / flight thickness

Trough Abrasion Score = trough surface speed x (product abrasiveness rating** - 4) x 2.5 / trough thickness

** From Table B (rating is either 5, 6 or 7)

As a rule, Abrasion Scores > 2000 lead to highly accelerated wear. Steps taken typically include one or more of the following:

- rpm is reduced (larger conveyor may be required to convey same capacity)
- material thickness for screw flighting and/or trough is increased
- abrasion resistant steps materials and/or coatings are implemented (see following tables)

ABRASION RESISTANT OPTIONS FOR SCREWS:

TYPE	DESCRIPTION	PROS	CONS
Ceramic	1/2" thick ceramic tiles are welded to carrying side of flighting, chemical and abrasion resistant polymer fills gaps between tiles	• Very high abrasion resistance under wet or dry conditions • Very thick wear surface (½") • High corrosion resistance • Medium cost	• Non-magnetic
Iron Based Weld Surfacing	Wire weld is applied to flighting surface	• High abrasion resistance under dry conditions • Magnetic • Low to medium cost	• Low abrasion resistance under wet conditions
Corrosion Resist. Weld Surfacing (such as Stellite)	Wire weld is applied to flighting surface	• High corrosion resistance • Machinable (to obtain high tolerance on flight OD)	• Medium abrasion resistance • High Cost • Non-magnetic
Fusion Spray Application (various materials such as Tungsten Carbide)	High temperature gun is used to fuse hard surface material to screw	• Very high abrasion resistance	• Medium to high cost • Usually non-magnetic
Abrasion Resistant Flighting	Screw flighting is made of AR235 or AR400 steel	• Low cost • Can use in combination with others	• Low abrasion resistance under wet conditions • Medium abrasion resistance under dry conditions
Industrial Hard Chromium	Electrolytic application	• Low sliding friction • High abrasion resistance • Food grade in most cases	• High cost • Size restrictions • Non-magnetic
Nickel Alloy	Electroless application	• Very uniform coating • High abrasion resistance • FDA and USDA approved	• High cost • Screw size restrictions • Difficult to limit to specific areas • Non-magnet

ABRASION RESISTANT OPTIONS FOR TROUGHS:

- Troughs made from AR plate
- Troughs oversized so that conveyed product runs across stationary layer of product below reducing exposure to trough surface (example: 16" screw in 18" trough)
- Troughs lined with various materials listed in chart above as well as UHMW and other polymers

SCREW CONVEYOR COMPONENTS

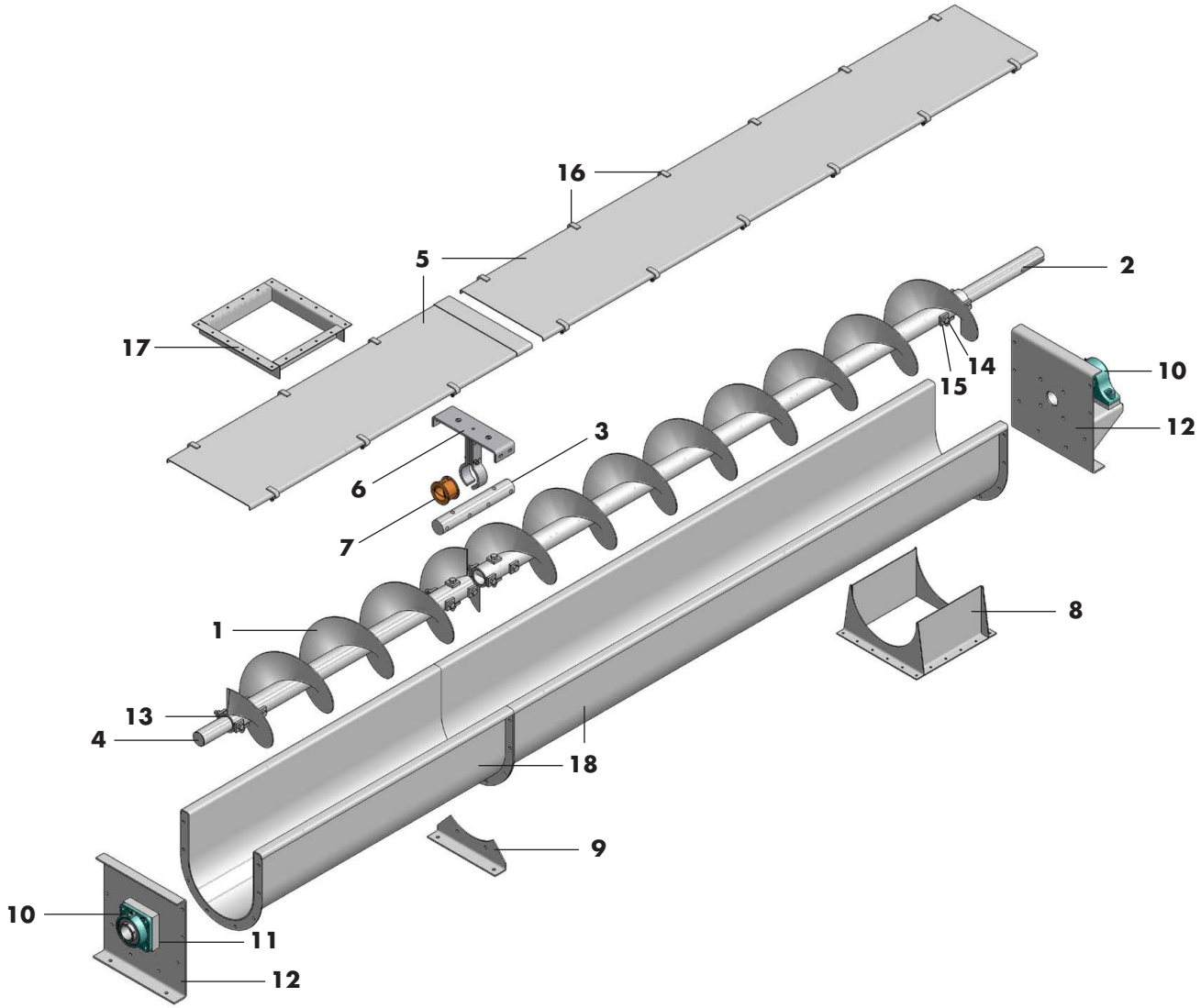

1. Screw (p.30)
2. Drive Shaft (p.42)
3. Coupling Shaft (p.44)
4. End (Tail) Shaft (p.45)
5. Covers (p.58)
6. Hanger (p.64)
7. Hanger Bearing (p.70)
8. Discharge (p.82)
9. Flange Foot (p.51)
10. End Bearings (p.78)
11. Shaft Seal (p.72)
12. End Plates (p.53)
13. Internal Collars/Bushings (p.71)
14. Coupling Bolts (p.41)
15. Bolt Pads (p.41)
16. Cover Clamps (p.63)
17. Inlet (p.81)
18. Troughs (p.46)

LAYOUT

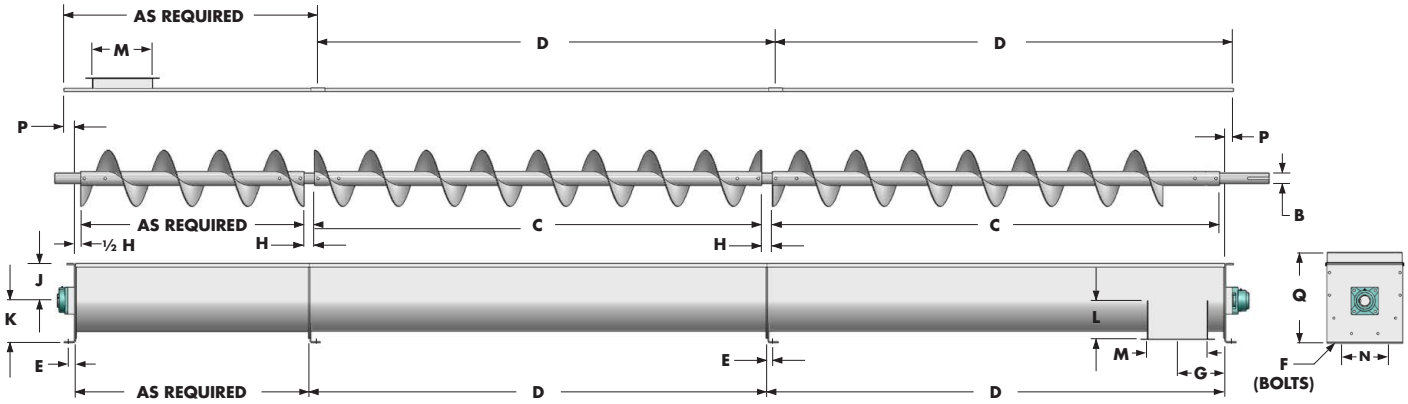

U-TROUGH TYPE

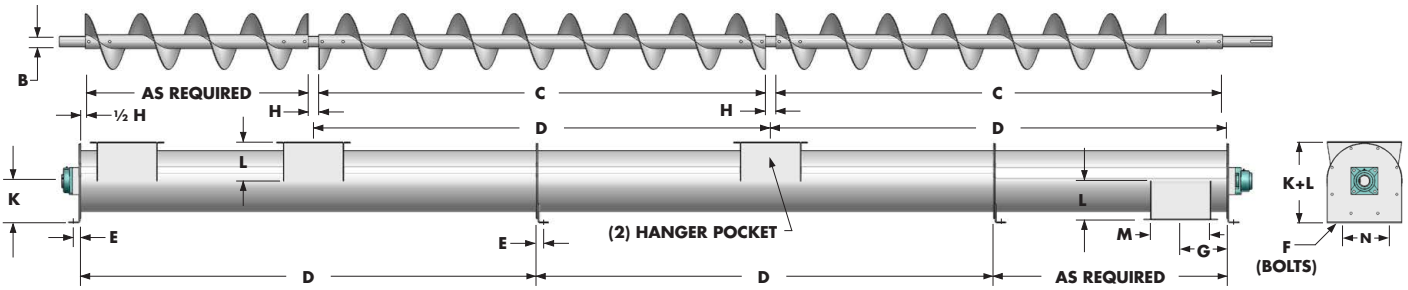

TUBE TROUGH TYPE

SCREW DIA	B SHAFT DIA	C LENGTH	D LENGTH	WT**	E	F BOLT	G	H	J	K	L	M	N	P	Q
6	1 ½	9'-10"	10'0"	400	1	⅜	6	2	4 ½	5 ⅝	5	7	8 ⅛	1 ½	13 ¼
9	1 ½	9'-10"	10'0"	650	1 ½	½	8	2	6 ⅛	7 ⅞	7 ⅛	10	9 ⅜	1 ⅝	17 ⅛
9	2	9'-10"	10'0"	675	1 ½	½	8	2	6 ⅛	7 ⅞	7 ⅛	10	9 ⅜	1 ⅝	17 ⅛
10	1 ½	9'-10"	10'0"	700	1 ¾	½	9	2	6 ⅜	8 ⅞	7 ⅞	11	9 ½	1 ¾	18 ⅜
10	2	9'-10"	10'0"	730	1 ¾	½	9	2	6 ⅜	8 ⅞	7 ⅞	11	9 ½	1 ¾	18 ⅜
12	2	11'-10"	12'0"	1050	1 ⅝	⅝	10 ½	2	7 ¾	9 ⅝	8 ⅞	13	12 ¼	2	20 ½
12	2 7/16	11'-9"	12'0"	1080	1 ⅝	⅝	10 ½	3	7 ¾	9 ⅝	8 ⅞	13	12 ¼	2	20 ½
12	3	11'-9"	12'0"	1140	1 ⅝	⅝	10 ½	3	7 ¾	9 ⅝	8 ⅞	13	12 ¼	2	20 ½
14	2 7/16	11'-9"	12'0"	1240	1 ⅝	⅝	11 ½	3	9 ¼	10 ⅞	10 ⅛	15	13 ½	2	23 ¼
14	3	11'-9"	12'0"	1300	1 ⅝	⅝	11 ½	3	9 ¼	10 ⅞	10 ⅛	15	13 ½	2	23 ¼
16	3	11'-9"	12'0"	1520	2	⅝	13 ½	3	10 ⅝	12	11 ⅛	17	14 ⅞	2 ½	25 ¾
18	3	11'-9"	12'0"	1790	2	⅝	14 ½	3	12 ⅛	13 ⅜	12 ⅜	19	16	2 ½	28 ⅝
18	3 7/16	11'-8"	12'0"	1900	2	⅝	14 ½	4	12 ⅛	13 ⅜	12 ⅜	19	16	2 ½	28 ⅝
20	3	11'-9"	12'0"	1960	2 ¼	¾	15 ½	3	13 ½	15	13 ⅜	21	19 ¼	2 ½	31 ⅝
20	3 7/16	11'-8"	12'0"	2050	2 ¼	¾	15 ½	4	13 ½	15	13 ⅜	21	19 ¼	2 ½	31 ⅝
24	3 7/16	11'-8"	12'0"	2510	2 ½	¾	17 ½	4	16 ½	18 ⅛	15 ⅜	25	20	2 ½	37 ¾
24	3 15/16	11'-8"	12'0"	2620	2 ½	¾	17 ½	4	16 ½	18 ⅛	15 ⅜	25	20	2 ½	37 ¾
30	3 7/16	11'-8"	12'0"	3150	2 ¾	¾	21	4	19 ¾	21 ½	18 ⅜	31	24	2 ½	44 ⅜
30	3 15/16	11'-8"	12'0"	3260	2 ¾	¾	21	4	19 ¾	21 ½	18 ⅜	31	24	2 ½	44 ⅜
36	3 15/16	11'-8"	12'0"	4160	2 ¾	1	25	4	24	26	23	37	*	2 ½	54 ⅛
36***	4 7/16	11'-7"	12'0"	4275	2 ¾	1	25	5	24	26	23	37	*	2 ½	54 ⅛

* Has 4 Bolts
** Wt. of one complete stainless steel conveyor with U-trough, medium flight thickness, "D" length, CSW seals, flange bearings less drive.
*** Sizes larger than 36" are available. Contact Conveyor Eng. & Mfg. for more information.

SCREWS

CLAD PIPE

Clad pipe is offered as an alternative to all stainless pipe. It generally consists of schedule 10 stainless pipe surrounding sch 80 carbon steel pipe. The result is a product that includes the best properties of both materials. Conveyor Engineering & Manufacturing introduced clad pipe to the screw conveyor industry over 20 years ago and it has been extremely successful, especially in tough applications.

BENEFITS:

- **Torque Capacity:** The thicker walled clad pipe can handle more horsepower and torque than comparative sized stainless pipe. Our destructive testing results are charted below (video of the actual testing is available).
- **Fatigue Resistant:** Carbon steel has much higher fatigue resistance than stainless steel. Stainless screws tend to develop stress cracks after a certain number of revolutions. This often leads to failure. Clad pipe offers the exceptional fatigue resistance of carbon steel with the corrosion resistance of stainless.
- **Deflection:** Clad pipe is more rigid structurally, resulting in lower deflection as measured at the center of the screws span. This lowers fatigue stress resulting in longer life and reduces the likelihood of screw to trough interference.
- **Price:** Clad pipe was developed to obtain higher structural integrity, not a price advantage. But stainless prices have increased over the years and we have developed more efficient methods in manufacturing clad pipe. The result is that, in most heavy-duty applications, clad pipe is a better product at a lower price.

Caution: Clad pipe is not recommended in environments containing highly corrosive vapors (especially at elevated temperatures).

PIPE CROSS-SECTIONS

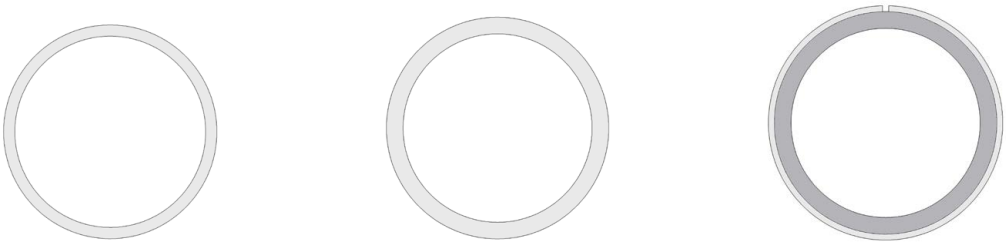

4″ SCH 40 S.S. **4″ SCH 80 S.S.** **4″ SCH 80/10 CLAD**

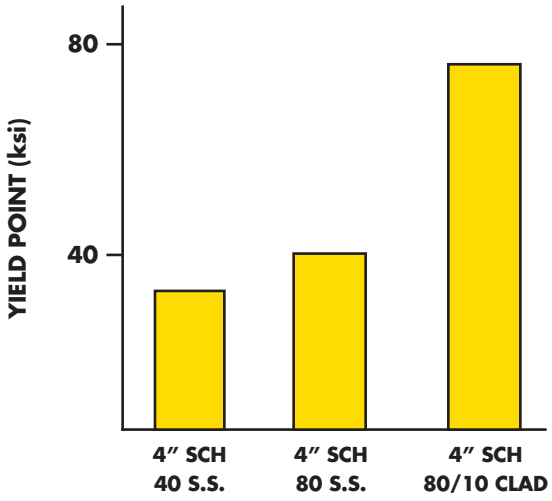

*Based on destructive testing

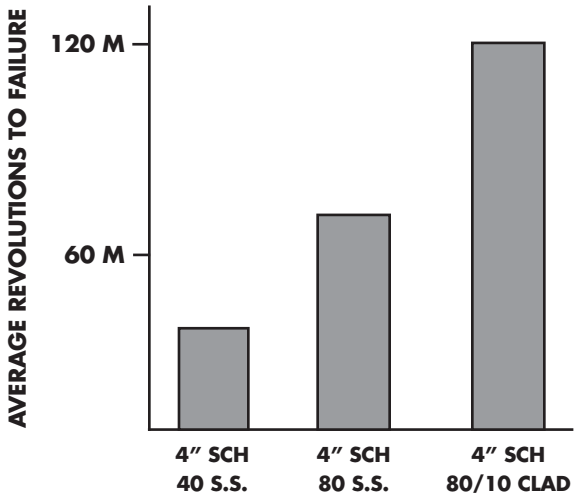

*Based on actual, heavy-duty field applications
16”, 3-bolt, standard length screws

PHONE 319.364.5600 | 800.452.4027 **FAX** 319.364.6449

SCREWS

DIRECTIONAL MOVEMENT OF CONVEYED PRODUCT

The views of the various flighting orientations below indicate which way product will move given the rotation indicated:

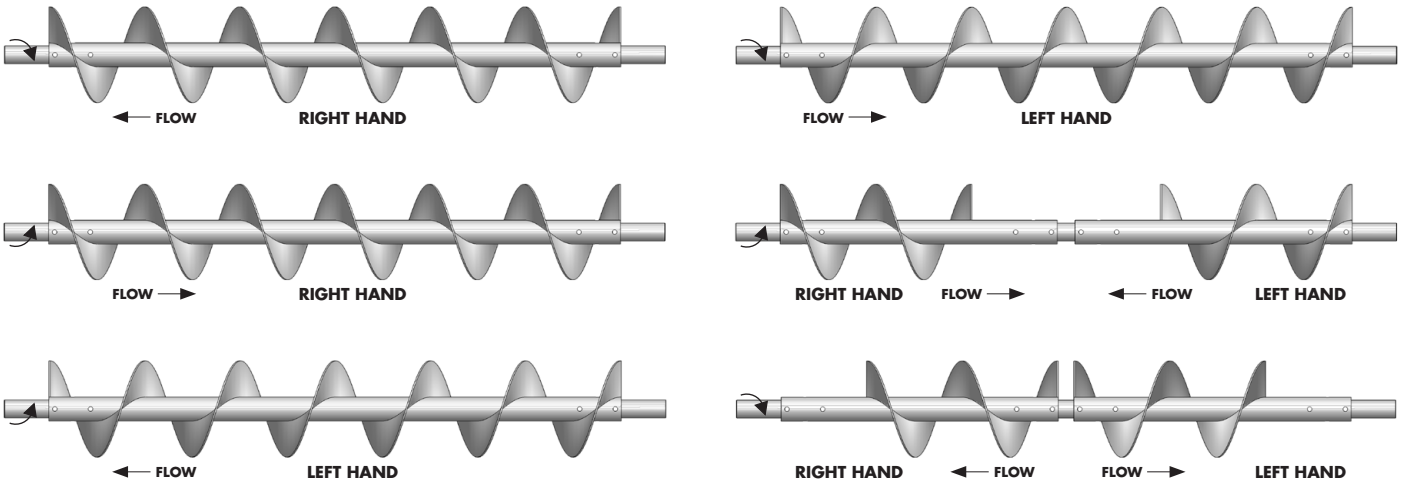

Note: As viewed from the inlet, right hand screws will carry product more to the right side. Left hand screws will carry to the left side.

SPECIAL SCREW WELD FINISHES

Certain applications may require continuously welding the flight to the pipe of the screw. Depending on the conveyed material this weld may also need to be “ground smooth” to reduce contamination.

“Grind Smooth” and "Food Grade" are general terms and subject to various interpretations. The table below should be used to determine which class of finish is required for an application.

	CLASS OF "CEMA" FINISH				
OPERATION	**I**	**II**	**III**	**IV**	**V**
Weld spatter and slag removed	X	X	X	X	X
Rough grind welds to remove heavy weld ripple or unusual roughness (40–50 grit finish)		X			
Medium grind welds, leaving some pits and crevices (80–100 grit finish)			X		
Fine grind welds-no pits or crevices permissible (140–150 grit finish)				X	X
Polish to bright uniform finish (150+ grit finish)					X

OTHER WELD FINISHES / TREATMENTS (Contact Conveyor Eng. & Mfg. for more information)

- Glass bead blasting
- Shot peening
- Needle peening
- Passivation
- Polishing

SCREWS

RIGHT HAND VS. LEFT HAND FLIGHTING

A screw is either right hand or left hand depending on the form of the helix. The direction of the helix determines which way the screw needs to rotate in order to move the material the proper direction. The screw hand can be determined by looking at the end of the screw. The helix of a left hand screw is wrapped around the pipe in a counter-clockwise direction, or to your left. The helix of a right hand screw is wrapped around the pipe in a clockwise direction, or to your right. Screws typically have right hand flighting unless an operational variable dictates otherwise.

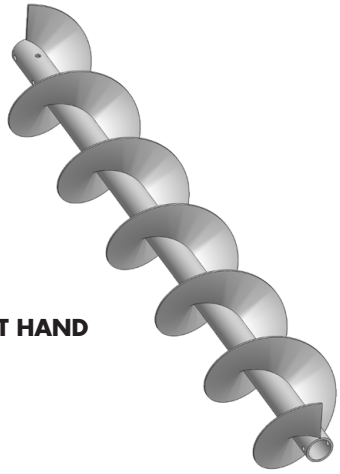

LEFT HAND

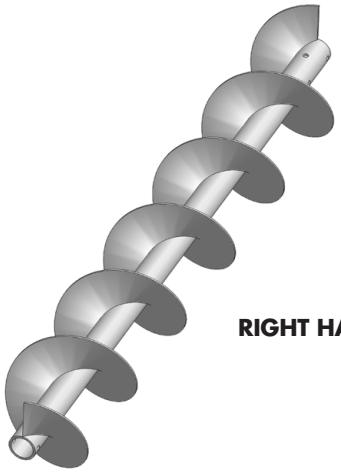

RIGHT HAND

PART NUMBER DESIGNATION

20 SS 7 24 - RH - 20P - 3B - 48010 - 316 - BP

SCREW DIAMETER (20)

FLIGHTING TYPE (SS)
SS = Stainless Sectional
CS = Carbon Sectional
SH = Stainless Helicoid
CH = Carbon Helicoid

COUPLING DIA (7)
3 = 1 ½”
4 = 2”
5 = 2 7⁄16”
6 = 3”
7 = 3 7⁄16”
8 = 3 15⁄16”
9 = 4 7⁄16”
10 = 4 15⁄16”
11 = 5 7⁄16”

FLIGHT THICKNESS (24)
07 = 12 GA.
09 = 10 GA.
12 = 3⁄16”
14 = 7⁄32”
16 = ¼”
24 = ⅜”
32 = ½”
40 = ⅝”
48 = ¾”
04, 06, 08 (helicoid p.36)

FLIGHTING HAND (RH)
RH = Right Hand
LH = Left Hand

FLIGHTING PITCH (20P)
#P (where "#" is actual pitch)
VP = Variable Pitch

PIPE SIZE (48010)
2 = 2”
25 = 2 ½”
3 = 3”
35 = 3 ½”
4 = 4”
45 = 4 ½”
5 = 5”
6 = 6”
8 = 8”
_40 = Sch 40
_80 = Sch 80
___10 = Sch 10 Clad
___12 = 3/16" Clad

COUPLING TYPE (3B)
2B = 2-bolt
3B = 3-bolt
4B = 4-bolt

OPTIONS** (316 - BP)
304 = 304SS Stainless Steel
316 = 316SS Stainless Steel
BP = Bolt Pads
C = Cut Flights
C&F = Cut & Folded Flights
CWBS = Cont. Weld Both Sides
CWOS = Cont. Weld One Side
FG = Food Grade Finish
IF = Interrupted Flights
PA = Paddles, Adjustable
PW = Paddles, Welded
RI = Ribbons, Integral
RP = Ribbons, Post

** Multiple options are separated by a dash and listed in alphabetical order

Example above: 20" diameter screw with stainless steel, sectional, 3/8" thick, right hand, 20" pitch flights mounted on 3-bolt drilled 4" sch 80 pipe clad with sch 10; product contact material is all 316SS; bolt pads to reinforce coupling bolts holes

Therefore, the full part number for this screw is 20SS724-RH-20P-3B-48010-316-BP

Unless noted otherwise, all screws will have flight lugs (reinforcement at screw ends, p.40) and stitch welds (food grade screws would be an exception to both)

PHONE 319.364.5600 | 800.452.4027 **FAX** 319.364.6449

SCREWS

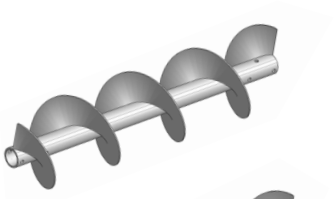

STANDARD SECTIONAL FLIGHT SCREW: Most common. Used to convey a wide variety of products.

RIBBON FLIGHT SCREW: Used for conveying sticky, gummy or viscous substances, or where the material tends to stick to the flighting at the pipe. Available in integral style (as shown) or post style ribbon.

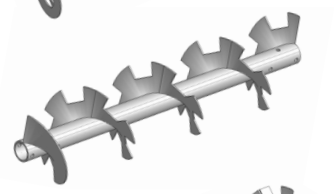

CUT FLIGHT SCREW: Used for conveying light, fine, granular or flaky materials. Also used for mixing material in transit or for removing grit and dirt from the grain, cottonseed, etc.

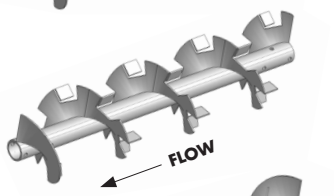

CUT AND FOLDED FLIGHT SCREW: Used to create a lifting motion with the material that promotes agitation and aeration while mixing.

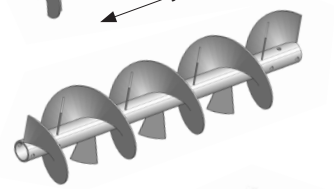

SECTIONAL FLIGHT SCREW WITH PADDLES: Used to mix material while being conveyed. Paddles may be fixed (welded in place) or adjustable pitch (bolt mounted, to provide different degrees of mixing).

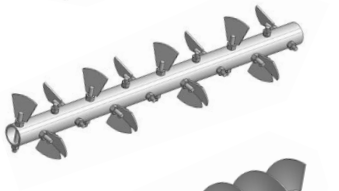

PADDLE SCREW: Used for complete mixing or stirring material. Paddles may be fixed (welded in place) or adjustable pitch (bolt mounted, to provide variable degrees of mixing).

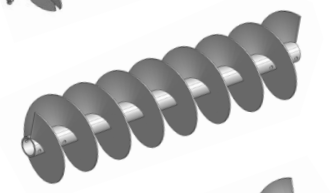

SHORT PITCH SCREW: Used primarily in incline or hopper fed applications where the pitch is less than the diameter of the screw.

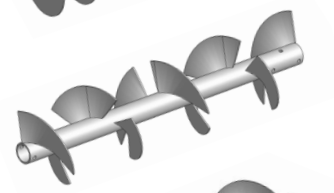

INTERRUPTED FLIGHT SCREW: As with a “ribbon screw”, used for conveying sticky, gummy or viscous substances, or where the material tends to stick to the flighting at the pipe; but offers better throughput and flow consistency than a ribbon screw.

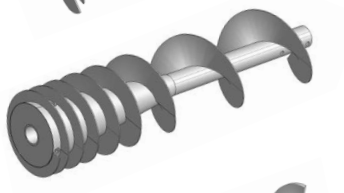

CONE SCREW: Used to provide better “mass flow” (uniform discharge) from a hopper or bin above than screws with variable pitch alone.

SHAFTLESS SCREW: Similar to ribbon screws, used for conveying sticky, gummy or viscous substances, or where the material tends to stick to the flighting at the pipe. Also used with stringy products that would typically wrap around the screw pipe.

PRESS SCREW: Typically surrounded by screens and used to press moisture from various products.

SCREWS

SECTIONAL SCREW

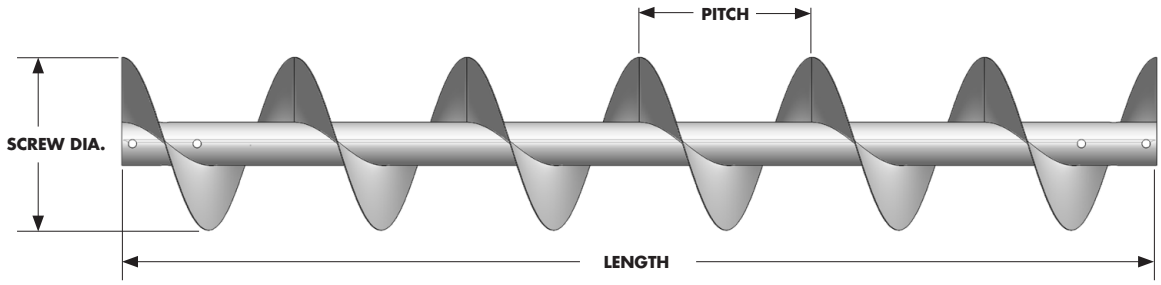

SCREW DIA	COUPLING SHAFT DIA	SCREW PART #	NOMINAL PIPE SIZE	PIPE OD	FLIGHT THICK.	STD LENGTH	STD LENGTH SCREW WT* (LB)			FLIGHT WT EACH (LB)
							SCH 40	SCH 80	SCH 80 CLAD**	
6	1 ½	6SS309	2	2 ⅜	10 ga	9'-10"	62	75	NA	1.1
6	1 ½	6SS312	2	2 ⅜	3/16	9'-10"	70	83	NA	1.6
6	1 ½	6SS316	2	2 ⅜	¼	9'-10"	80	93	NA	2.1
9	1 ½	9SS309	2 ½	2 ⅜	10 ga	9'-10"	78	91	NA	3.0
9	1 ½	9SS312	2 ½	2 ⅞	3/16	9'-10"	115	132	NA	3.9
9	1 ½	9SS316	2 ½	2 ⅞	¼	9'-10"	131	148	NA	5.2
9	2	9SS409	2 ½	2 ⅞	10 ga	9'-10"	97	115	NA	2.8
9	2	9SS412	2 ½	2 ⅞	3/16	9'-10"	111	128	NA	3.9
9	2	9SS416	2 ½	2 ⅞	¼	9'-10"	127	144	NA	5.2
9	2	9SS424	2 ½	2 ⅞	⅜	9'-10"	159	176	NA	7.7
10	1 ½	10SS309	2 ½	2 ⅞	10 ga	9'-10"	106	124	NA	3.6
10	1 ½	10SS312	2 ½	2 ⅞	3/16	9'-10"	122	139	NA	5.0
10	2	10SS409	2 ½	2 ⅞	10 ga	9'-10"	103	120	NA	3.6
10	2	10SS412	2 ½	2 ⅞	3/16	9'-10"	118	136	NA	5.0
10	2	10SS416	2 ½	2 ⅞	¼	9'-10"	137	154	NA	6.6
10	2	10SS424	2 ½	2 ⅞	⅜	9'-10"	174	191	NA	9.9
12	2	12SS412	2 ½	2 ⅞	3/16	11'-10"	134	151	NA	7.6
12	2	12SS416	2 ½	2 ⅞	¼	11'-10"	157	175	NA	10.1
12	2 7/16	12SS512	3	3 ½	3/16	11'-9"	178	208	257	7.1
12	2 7/16	12SS516	3	3 ½	¼	11'-9"	205	235	284	9.5
12	2 7/16	12SS524	3	3 ½	⅜	11'-9"	258	288	337	14.2
12	3	12SS612	3 ½	4	3/16	11'-9"	193	231	287	6.8
12	3	12SS616	3 ½	4	¼	11'-9"	218	256	312	9.0
12	3	12SS624	3 ½	4	⅜	11'-9"	268	306	363	13.5
14	2 7/16	14SS512	3	3 ½	3/16	11'-9"	196	226	275	10.2
14	2 7/16	14SS516	3	3 ½	¼	11'-9"	229	259	308	13.6
14	2 7/16	14SS524	3 ½	4	⅜	11'-9"	311	349	405	19.5
14	3	14SS612	3 ½	4	3/16	11'-9"	211	249	305	9.7
14	3	14SS616	3 ½	4	¼	11'-9"	242	280	336	13.0
14	3	14SS624	3 ½	4	⅜	11'-9"	304	342	398	19.5
16	3	16SS612	3 ½	4	3/16	11'-9"	229	267	323	13.3
16	3	16SS616	3 ½	4	¼	11'-9"	266	304	360	17.7
16	3	16SS624	4	4 ½	⅜	11'-9"	360	407	471	25.6
16	3	16SS632	4	4 ½	½	11'-9"	432	479	542	34.1

Larger pipe, shaft and screw sizes available. Thicker flights also available. Contact Conveyor Eng. & Mfg. for more information.

(Continued)

* Weight shown are for stainless steel screws (2-bolt bushings on this page, 3-bolt on next page). Carbon steel screw weights are 2.2% lower.

** Sched 80 carbon pipe clad w/sched 10 stainless pipe or equiv. See p.30

SCREWS

SECTIONAL SCREW

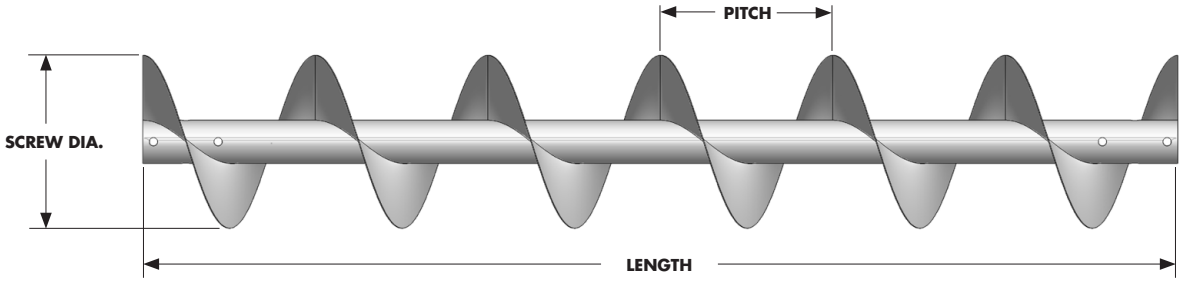

SCREW DIA	COUPLING SHAFT DIA	SCREW PART #	NOMINAL PIPE SIZE	PIPE OD	FLIGHT THICK.	STD LENGTH	STD LENGTH SCREW WT* (LB)			FLIGHT WT EACH (LB)
							SCH 40	SCH 80	SCH 80 CLAD**	
18	3	18SS612	3 ½	4	3/16	11'-9"	252	288	344	17.4
18	3	18SS616	3 ½	4	¼	11'-9"	295	332	388	23.2
18	3	18SS624	4	4 ½	⅜	11'-9"	406	451	514	33.7
18	3	18SS632	4	4 ½	½	11'-9"	490	535	598	44.9
18	3 7/16	18SS712	4	4 ½	3/16	11'-8"	274	317	380	16.8
18	3 7/16	18SS716	4	4 ½	¼	11'-8"	316	358	421	22.4
18	3 7/16	18SS724	4	4 ½	⅜	11'-8"	399	442	504	33.7
18	3 7/16	18SS732	4	4 ½	½	11'-8"	482	525	587	44.9
20	3	20SS612	3 ½	4	3/16	11'-9"	270	307	363	22.1
20	3	20SS616	3 ½	4	¼	11'-9"	320	356	412	29.5
20	3	20SS624	3 ½	4	⅜	11'-9"	419	455	511	44.2
20	3	20SS632	4	4 ½	½	11'-9"	539	584	647	57.2
20	3 7/16***	20SS712	4***	4 ½	3/16	11'-8"	293	335	398	21.4
20	3 7/16***	20SS716	4***	4 ½	¼	11'-8"	340	383	445	28.6
20	3 7/16***	20SS724	4***	4 ½	⅜	11'-8"	436	478	541	42.9
20	3 7/16***	20SS732	5***	5 9/16	½	11'-8"	598	660	746	53.5
24	3 7/16***	24SS716	4***	4 ½	¼	11'-8"	389	432	495	43.1
24	3 7/16***	24SS724	4***	4 ½	⅜	11'-8"	509	552	615	64.7
24	3 7/16***	24SS732	5***	5 9/16	½	11'-8"	694	756	843	81.6
24	3 15/16***	24SS816	5***	5 9/16	¼	11'-8"	451	513	600	40.8
24	3 15/16***	24SS824	5***	5 9/16	⅜	11'-8"	565	626	713	61.2
24	3 15/16***	24SS832	5***	5 9/16	½	11'-8"	678	740	826	81.6
30	3 7/16***	30SS716	4***	4 ½	¼	11'-8"	465	507	570	70.8
30	3 7/16***	30SS724	4***	4 ½	⅜	11'-8"	622	664	727	106.2
30	3 7/16***	30SS732	5***	5 9/16	½	11'-8"	841	904	990	135.2
30	3 15/16***	30SS816	5***	5 9/16	¼	11'-8"	525	587	673	67.6
30	3 15/16***	30SS824	5***	5 9/16	⅜	11'-8"	675	737	824	101.4
30	3 15/16***	30SS832	5***	5 9/16	½	11'-8"	825	887	974	135.2
36	3 15/16***	36SS816	5***	5 9/16	¼	11'-8"	600	662	748	101.4
36	3 15/16***	36SS824	5***	5 9/16	⅜	11'-8"	788	849	936	152.0
36	3 15/16***	36SS832	5***	5 9/16	½	11'-8"	975	1037	1124	202.7
36	4 7/16***	36SS916	6***	6 ⅝	¼	11'-7"	672	767	869	97.5
36	4 7/16***	36SS924	6***	6 ⅝	⅜	11'-7"	851	946	1048	146.3
36	4 7/16***	36SS932	6***	6 ⅝	½	11'-7"	1031	1125	1228	195.0

Larger pipe, shaft and screw sizes available. Thicker flights also available. Contact Conveyor Eng. & Mfg. for more information.
* Weight shown are for stainless steel screws (3-bolt bushings on this page, 2-bolt for previous page). Carbon steel screw weights are 2.2% lower.
** Sched 80 carbon pipe clad w/sched 10 stainless pipe or equiv. See p.30
*** Pipe and shaft size shown should be considered minimum standard and are often larger as dictated by drive horsepower.

SCREWS

HELICOID SCREW

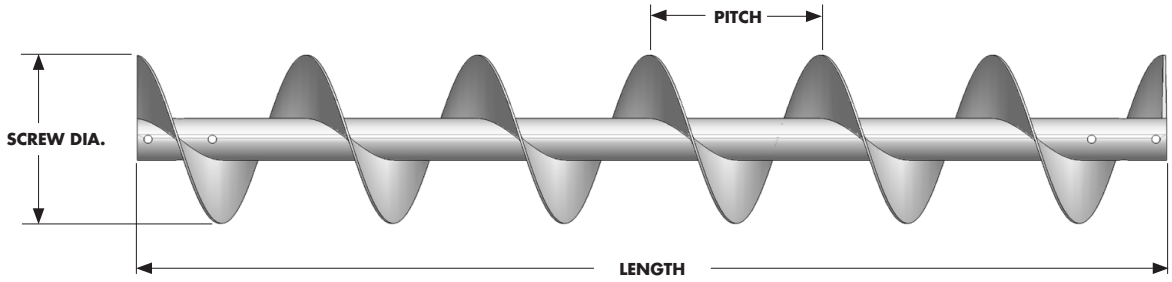

SCREW DIA	COUPLING SHAFT DIA	SCREW PART #	NOMINAL PIPE SIZE	PIPE OD	FLIGHT AT BASE	THICKNESS AT TIP	STANDARD LENGTH	STD LENGTH SCREW WT (LB)	FLIGHTING ONLY STD LENGTH WT (LB)
6	1 ½	6SH304	2	2 ⅜	⅛	1/16	9'-10"	52	14
9	1 ½	9SH306	2	2 ⅜	3/16	3/32	9'-10"	70	31
9	2	9SH406	2 ½	2 ⅞	3/16	3/32	9'-10"	91	30
10	1 ½	10SH306	2	2 ⅜	3/16	3/32	9'-10"	81	48
12	2	12SH408	2 ½	2 ⅞	¼	⅛	11'-10"	140	67

Chart shows sizes available in stainless steel.

WARNING: Helicoid screws have flighting that gets progressively thinner from the base to the tip (see below) so they wear down much more quickly than sectional screws. Therefore, they should only be used in nonabrasive, light-duty applications.

SECTIONAL VS. HELICOID FLIGHTING

Screw conveyor flighting is made in either one of two ways, as "helicoid" or "sectional". Helicoid flights are formed from a flat bar or strip into a continuous helix. Sectional flights are formed from individual round plates then welded end to end to form a continuous helix. The largest difference between the two flight types is that the "helicoid" flight thickness is thinner at the edge than the base due to material stretch and "sectional" flights have a continuous thickness.

Due to the way the two flights are manufactured the "sectional" flight can be made from thicker material than the "helicoid" flight and thus is used for heavier or more abrasive applications.

Enlarged views of the flighting tip shows the difference in material thickness between comparable sectional and helicoid flight sizes.

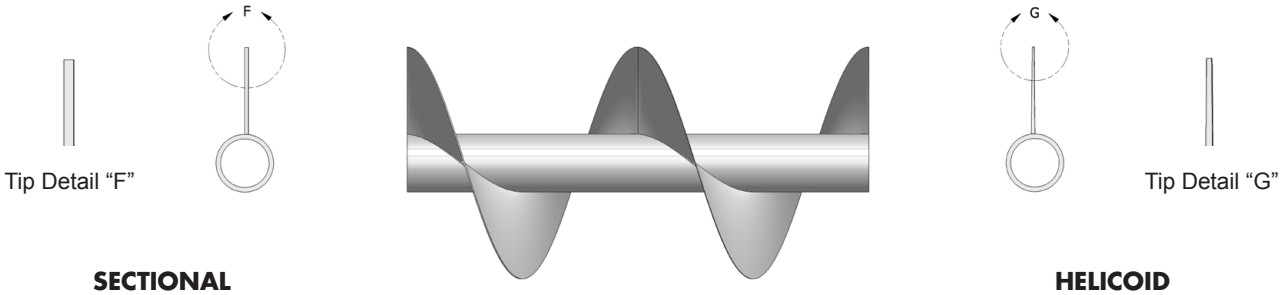

SECTIONAL
(Standard and Heavy Duty)

HELICOID
(Light Duty)

PHONE 319.364.5600 | 800.452.4027 **FAX** 319.364.6449

SCREWS

RIBBON SCREW

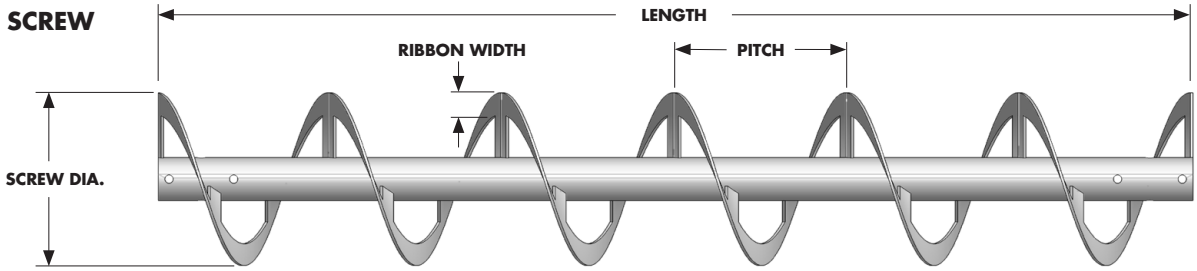

INTEGRAL RIBBON SCREW

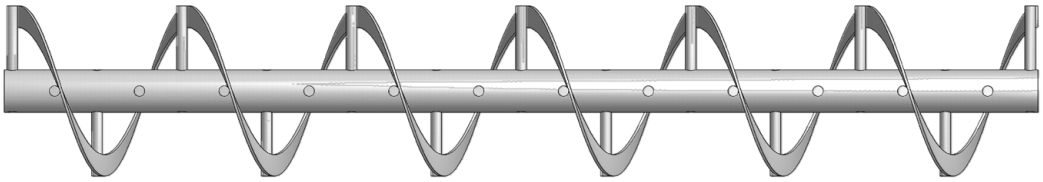

POST RIBBON SCREW

SCREW DIA	COUPLING SHAFT DIA	INTEGRAL RIBBON #	POST RIBBON #	PIPE SIZE	PIPE OD	FLIGHT THICK.	RIBBON WIDTH	STD LENGTH	STD LENGTH SCREW WT (LB)*	FLIGHT WT EACH (LB)
6	1 ½	6SS312-IR	6SS312-PR	2	2 ⅜	3/16	1	9'-10"	60	1.0
9	1 ½	9SS316-IR	9SS316-PR	2 ½	2 ⅞	¼	1 ½	9'-10"	106	3.1
9	2	9SS416-IR	9SS416-PR	2 ½	2 ⅞	¼	1 ½	9'-10"	105	3.1
10	1 ½	10SS316-IR	10SS316-PR	2 ½	2 ⅞	¼	1 ½	9'-10"	108	3.6
10	2	10SS416-IR	10SS416-PR	2 ½	2 ⅞	¼	2	9'-10"	116	4.4
12	2	12SS416-IR	12SS416-PR	2 ½	2 ⅞	¼	2	11'-10"	145	5.8
12	2	12SS424-IR	12SS424-PR	2 ½	2 ⅞	⅜	2 ½	11'-10"	178	8.6
12	2 7/16	12SS516-IR	12SS516-PR	3	3 ½	¼	2	11'-9"	167	5.6
12	2 7/16	12SS524-IR	12SS524-PR	3	3 ½	⅜	2 ½	11'-9"	215	9.7
12	3	12SS616-IR	12SS616-PR	3 ½	4	¼	2	11'-9"	185	5.5
12	3	12SS624-IR	12SS624-PR	3 ½	4	⅜	2 ½	11'-9"	232	9.5
14	2 7/16	14SS516-IR	14SS516-PR	3	3 ½	¼	2	11'-9"	172	7.0
14	2 7/16	14SS524-IR	14SS524-PR	3 ½	4	⅜	2 ½	11'-9"	243	12.0
14	3	14SS616-IR	14SS616-PR	3 ½	4	¼	2	11'-9"	190	6.9
14	3	14SS624-IR	14SS624-PR	3 ½	4	⅜	2 ½	11'-9"	241	12.0
16	3	16SS616-IR	16SS616-PR	3 ½	4	¼	2	11'-9"	192	8.2
16	3	16SS624-IR	16SS624-PR	4	4 ½	⅜	2 ½	11'-9"	311	14.4
18	3	18SS624-IR	18SS624-PR	3 ½	4	⅜	3	11'-9"	274	19.6
18	3 7/16	18SS724-IR	18SS724-PR	4	4 ½	⅜	3	11'-8"	343	19.3
20	3	20SS624-IR	20SS624-PR	3 ½	4	⅜	3	11'-9"	280	22.8
20	3 7/16	20SS724-IR	20SS724-PR	4	4 ½	⅜	3	11'-8"	350	22.4
24	3 7/16	24SS724-IR	24SS724-PR	4	4 ½	⅜	3	11'-8"	359	28.5
24	3 7/16	24SS732-IR	24SS732-PR	5	5 9/16	½	4	11'-8"	488	37.6
30	3 7/16	30SS724-IR	30SS724-PR	4	4 ½	⅜	3	11'-8"	368	37.6
30	3 7/16	30SS732-IR	30SS732-PR	5	5 9/16	½	4	11'-8"	510	50.0
36	3 15/16	36SS824-IR	36SS824-PR	5	5 9/16	⅜	4	11'-8"	513	59.0
36	3 15/16	36SS832-IR	36SS832-PR	5	5 9/16	½	5	11'-8"	621	86.7

*For screw weight calculations, pipe is assumed to be sch 40 if 3-1/2" or smaller, sch 80 if 4" or larger.
Larger pipe, shaft and ribbon screw sizes available. Thicker ribbon flights also available. Contact Conveyor Eng. & Mfg. for more information.

SCREWS

PADDLE SCREW

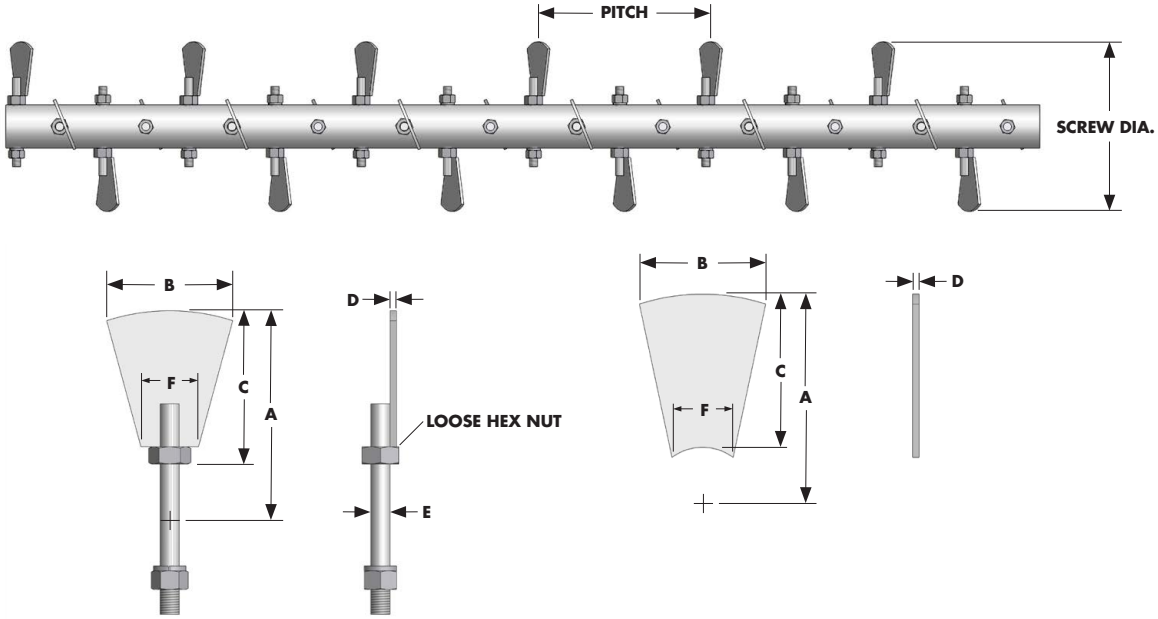

ADJUSTABLE PADDLES

FIXED (WELDED) PADDLES

SCREW DIA	COUPLING SHAFT DIA	SCREW PART #	NOMINAL PIPE SIZE	PIPE OD	A	B	C	D	E	F	STANDARD LENGTH	PADDLE WT EACH (LBS)
6	1 ½	6SS312-P	2	2 ⅜	3	2 1/16	1 13/16	¼	½	1 7/16	9'-10"	0.5
9	1 ½	9SS316-P	2 ½	2 ⅞	4 ½	2 ¾	3 1/16	¼	⅝	1 ⅝	9'-10"	0.75
9	2	9SS416-P	2 ½	2 ⅞	4 ½	2 ¾	3 1/16	¼	⅝	1 ⅝	9'-10"	0.75
10	1 ½	10SS316-P	2 ½	2 ⅞	5	3 ⅛	3 9/16	¼	⅝	1 ⅝	9'-10"	1.0
10	2	10SS416-P	2 ½	2 ⅞	5	3 ⅛	3 9/16	¼	⅝	1 ⅝	9'-10"	1.0
12	2	12SS416-P	2 ½	2 ⅞	6	3 11/16	4 9/16	¼	⅝	1 ¾	11'-10"	1.5
12	2 7/16	12SS516-P	3	3 ½	6	3 11/16	4 ¼	¼	⅝	1 ⅞	11'-9"	1.75
12	2 7/16	12SS524-P	3	3 ½	6	3 11/16	4 ¼	⅜	⅝	1 ⅞	11'-9"	1.75
12	3	12SS616-P	3 ½	4	6	3 11/16	4	¼	¾	2	11'-9"	2.0
12	3	12SS624-P	3 ½	4	6	3 11/16	4	⅜	¾	2	11'-9"	2.0
14	2 7/16	14SS516-P	3	3 ½	7	4 ¼	5 ¼	¼	⅝	2	11'-9"	2.25
14	2 7/16	14SS524-P	3	3 ½	7	4 ¼	5 ¼	⅜	⅝	2	11'-9"	2.25
14	3	14SS616-P	3 ½	4	7	4 ¼	5	¼	¾	2 ⅛	11'-9"	2.5
14	3	14SS624-P	3 ½	4	7	4 ¼	5	⅜	¾	2 ⅛	11'-9"	2.5
16	3	16SS616-P	3 ½	4	8	4 15/16	6	¼	¾	2 ¼	11'-9"	3.25
16	3	16SS624-P	4	4 ½	8	4 15/16	5 ¾	⅜	¾	2 ¼	11'-9"	3.25
18	3	18SS624-P	3 ½	4	9	5 ⅜	7	⅜	¾	2 ⅛	11'-9"	4.0
18	3 7/16	18SS724-P	4	4 ½	9	5 ⅜	6 ¾	⅜	⅞	2 ¼	11'-8"	4.25
20	3	20SS624-P	3 ½	4	10	6 ⅛	8	⅜	¾	2 7/16	11'-8"	4.75
20	3 7/16	20SS724-P	4	4 ½	10	6 ⅛	7 ¾	⅜	⅞	2 9/16	11'-8"	5.0
24	3 7/16	24SS724-P	4	4 ½	12	7 ⅜	9 ¾	⅜	¾	2 11/16	11'-8"	6.75
24	3 7/16	24SS732-P	5	5 9/16	12	7 ⅜	9 7/32	½	⅞	2 13/16	11'-8"	9.0
30	3 7/16	30SS724-P	4	4 ½	15	9 ¼	12 ¾	⅜	⅞	2 ¾	11'-8"	8.0
30	3 7/16	30SS732-P	5	5 9/16	15	9 ¼	12 7/32	½	⅞	2 ⅞	11'-8"	11.0
36	3 15/16	36SS824-P	5	5 9/16	18	11	15 3/16	⅜	1 ⅛	3 ¼	11'-8"	11.25
36	3 15/16	36SS832-P	5	5 9/16	18	11	15 3/16	½	1 ⅛	3 ¼	11'-8"	15.0

Larger pipe, shaft and paddle screw sizes available. Other paddles designs also available. Contact Conveyor Eng. & Mfg. for more information.

PHONE 319.364.5600 | 800.452.4027 **FAX** 319.364.6449

SCREWS

CUT FLIGHT SCREW

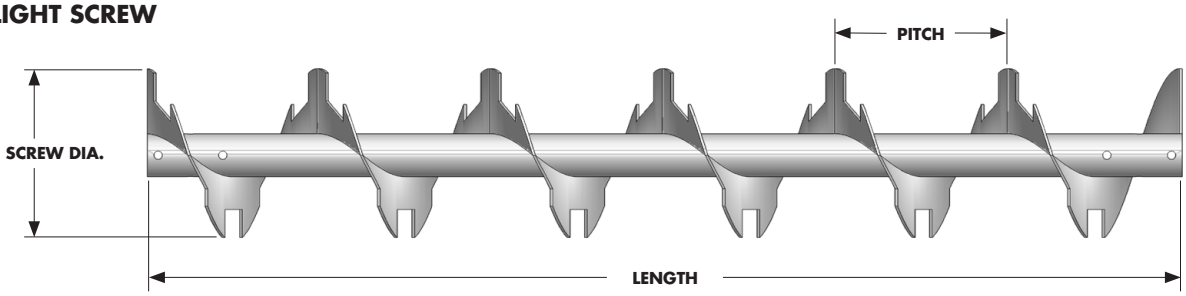

CUT & FOLDED FLIGHT SCREW

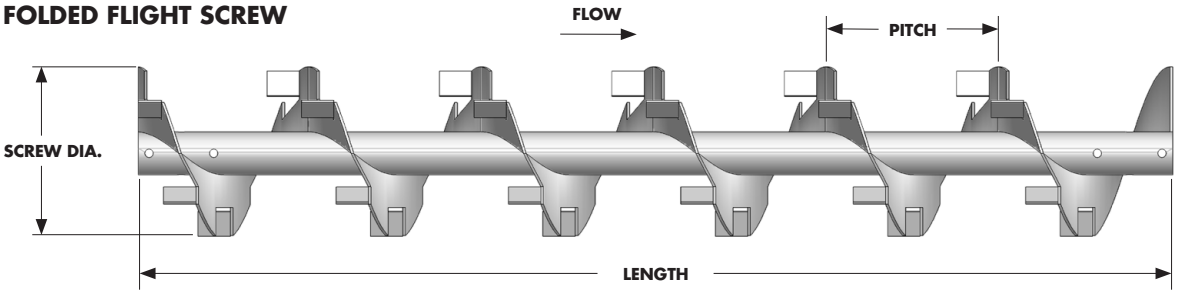

SCREW DIA	COUPLING SHAFT DIA	SCREW PART #		NOM. PIPE SIZE	PIPE OD	FLIGHT THICK.	STD. LENGTH	STD LENGTH SCREW WT (LB)*		FLIGHT WT EACH (LB)	
		CUT	CUT & FLDD					C	C&F	C	C&F
6	1 ½	6SS312-C	6SS312-C&F	2	2 ⅜	3/16	9'-10"	61	70	1.1	1.6
9	1 ½	9SS316-C	9SS316-C&F	2 ½	2 ⅞	¼	9'-10"	110	131	3.5	5.2
9	2	9SS416-C	9SS416-C&F	2 ½	2 ⅞	¼	9'-10"	106	127	3.5	5.2
10	1 ½	10SS316-C	10SS316-C&F	2 ½	2 ⅞	¼	9'-10"	117	135	4.5	6.6
10	2	10SS416-C	10SS416-C&F	2 ½	2 ⅞	¼	9'-10"	113	137	4.5	6.6
12	2	12SS416-C	12SS416-C&F	2 ½	2 ⅞	¼	11'-10"	127	134	5.2	7.6
12	2 7/16	12SS516-C	12SS516-C&F	3	3 ½	¼	11'-9"	171	205	6.5	9.5
12	2 7/16	12SS524-C	12SS524-C&F	3	3 ½	⅜	11'-9"	207	258	9.7	14.2
12	3	12SS616-C	12SS616-C&F	3 ½	4	¼	11'-9"	186	218	6.1	9.0
12	3	12SS624-C	12SS624-C&F	3 ½	4	⅜	11'-9"	220	268	9.2	13.5
14	2 7/16	14SS516-C	14SS516-C&F	3	3 ½	¼	11'-9"	187	229	9.2	13.6
14	2 7/16	14SS524-C	14SS524-C&F	3 ½	4	⅜	11'-9"	251	311	13.3	19.5
14	3	14SS616-C	14SS616-C&F	3 ½	4	¼	11'-9"	202	242	8.8	13.0
14	3	14SS624-C	14SS624-C&F	3 ½	4	⅜	11'-9"	244	304	13.3	19.5
16	3	16SS616-C	16SS616-C&F	3 ½	4	¼	11'-9"	218	266	12.0	17.7
16	3	16SS624-C	16SS624-C&F	4	4 ½	⅜	11'-9"	346	407	17.4	25.6
18	3	18SS624-C	18SS624-C&F	4	4 ½	⅜	11'-9"	371	451	22.9	33.7
18	3 7/16	18SS724-C	18SS724-C&F	4	4 ½	⅜	11'-8"	362	442	22.9	33.7
20	3	20SS624-C	20SS624-C&F	3 ½	4	⅜	11'-9"	319	419	30.1	44.2
20	3 7/16	20SS724-C	20SS724-C&F	4	4 ½	⅜	11'-8"	386	478	29.2	42.9
24	3 7/16	24SS724-C	24SS724-C&F	4	4 ½	⅜	11'-8"	437	552	44.0	64.7
24	3 7/16	24SS732-C	24SS732-C&F	5	5 9/16	½	11'-8"	611	672	55.5	81.6
30	3 7/16	30SS724-C	30SS724-C&F	5	5 9/16	⅜	11'-8"	609	753	69.0	101.4
30	3 7/16	30SS732-C	30SS732-C&F	5	5 9/16	½	11'-8"	711	904	91.9	135.2
36	3 15/16	36SS824-C	36SS824-C&F	5	5 9/16	⅜	11'-8"	669	849	103.4	152.0
36	3 15/16	36SS832-C	36SS832-C&F	5	5 9/16	½	11'-8"	797	1037	137.8	202.7

*For screw weight calculations, pipe is assumed to be sch 40 if 3-1/2" or smaller, sch 80 if 4" or larger.
Larger pipe, shaft and screw sizes available. Thicker flights also available. Contact Conveyor Eng. & Mfg. for more information.

SCREWS

SHAFTLESS SCREW

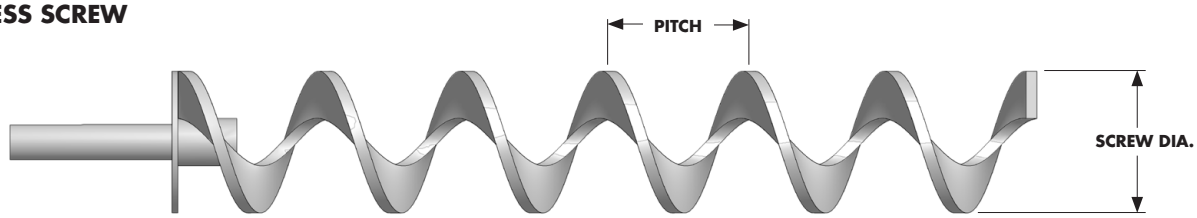

SCREW DIA	MAX RPM	45% TROUGH LOAD CAPACITY (CF/HR)			95% TROUGH LOAD CAPACITY (CF/HR)		
		1/2 Pitch	2/3 Pitch	Full Pitch	1/2 Pitch	2/3 Pitch	Full Pitch
6	25	25	35	50	55	75	110
9	25	90	120	180	295	260	390
10	25	130	175	260	275	360	550
12	25	225	300	450	465	625	930
14	25	365	500	730	775	1050	1550
16	25	515	700	1030	1100	1450	2200
18	25	765	1000	1525	1600	2200	3200
20	25	1075	1450	2150	2250	3000	4500
24	25	1700	2300	3400	3600	4800	7200
30	25	3400	4500	6800	7250	9600	14500

Note: Shaftless screws require extra design steps that are outside the scope of this guide. Contact Conveyor Eng. & Mfg. for more.

SCREW STRAIGHTENING & SHAFT RUN-OUT

The final step in manufacturing a screw is the straightening process. This process may involve lasers for accuracy and ensures that every screw turns "true" with its shafts. A screw that is properly straightened will result in longer life of coupling bolts, hanger bearings, end bearings and shafts as well as the screw's pipe and internal collars. This is even more significant with stainless steel components due to their lower ability to handle fatigue stresses. After straightening, a coupling shaft is bolted in and the screw is rotated while a dial indicator measures run-out at a point 10" from the center of the bearing area.

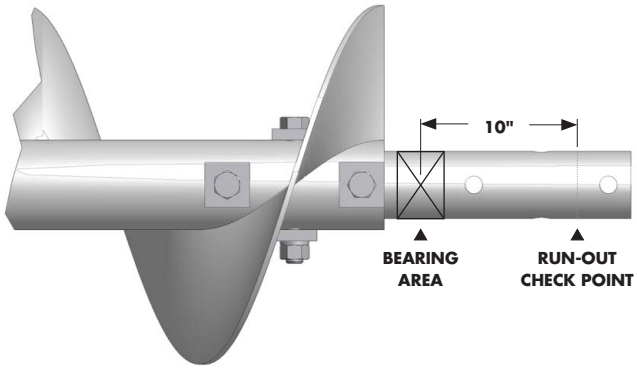

SHAFT SIZE	MAX RUN-OUT
1 ½	0.010"
2	0.010"
2 7/16	0.010"
3	0.010"
3 7/16	0.010"
3 15/16	0.010"
4 7/16	0.010"
4 15/16	0.010"
5 7/16	0.010"

Note: For special circumstances, tighter limits can be obtained on request.

FLIGHT LUGS

Each end of a screw is reinforced with a flight lug that is mounted on the back side (non product carrying side) of the flighting. Flight lugs are standard except in certain situations such as when a polished, food-grade finish is required

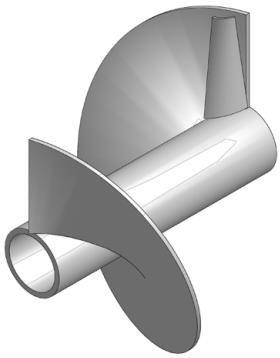

PHONE 319.364.5600 | 800.452.4027 **FAX** 319.364.6449

COUPLING BOLTS/BOLT PADS

COUPLING BOLTS

SHAFT SIZE	NOMINAL PIPE SIZE	BOLT SIZE (316SS, UNC) w/o BOLT PADS	BOLT SIZE (316SS, UNC) w/ BOLT PADS	MAX TORQUE* (FT-LB) 316SS	MAX TORQUE* (FT-LB) GRADE 5 CS
1 ½	2	½ x 3	-	45	75
1 ½	2 ½	½ x 4	-	45	75
2	2 ½	⅝ x 4	⅝ x 5	95	150
2	3	⅝ x 5	⅝ x 6	95	150
2	3 ½	⅝ x 5 ½	⅝ x 6 ½	95	150
2 7/16	3	⅝ x 5	⅝ x 6	95	150
2 7/16	3 ½	⅝ x 5 ½	⅝ x 6 ½	95	150
2 7/16	4	⅝ x 6	⅝ x 7	95	150
3	3 ½	¾ x 5 ½	¾ x 6 ½	130	260
3	4	¾ x 6	¾ x 7	130	260
3	5	¾ x 7	¾ x 8	130	260
3 7/16	4	⅞ x 6	⅞ x 7	200	430
3 7/16	5	⅞ x 7	⅞ x 8	200	430
3 7/16	6	⅞ x 8	⅞ x 9	200	430
3 15/16	6	1 ⅛ x 8 ½	1 ⅛ x 9 ½	430	790
3 15/16	8	1 ⅛ x 12	1 ⅛ x 13	430	790
4 7/16	6	1 ¼ x 8 ½	1 ¼ x 9 ½	545	1120
4 7/16	8	1 ¼ x 11	1 ¼ x 12	545	1120
4 15/16	8	1 ½ x 11	1 ½ x 12	930	1950
5 7/16	8	1 ¾ x 11 ½	1 ¾ x 12 ½	1050	2200

* Torque values are based on non lubricated installation. Reduce torque by 20% for lubricated fasteners.
* Plated fasteners are considered lubricated.
* Anti-Seize is recommended with SS bolts to reduce galling and allow for reuse but torque max is reduced by 30%

IMPORTANT: Various conditions can require torque values differing from those shown in the chart. Also keep in mind that these are max torque limits. Coupling bolts are typically only loaded in shear so tightening to lower torque values should extend bolt life and reduce the likelihood of failure.

***Do not attempt to use hex bolts in place of coupling bolts**. Coupling bolts have longer, unthreaded shanks necessary for shear strength which is typically the limiting design factor. Example: When its threads extend into the shear plane between the shaft and internal collar, the shear strength of a 3/4" standard hex bolt is only 73% that of a 3/4" coupling bolt.*

BOLT PADS

Bolt pads are an option available on all screws with shafts larger than 1½" in diameter to increase performance of the coupling bolts. Constructed from ½" thick material, bolt pads increase the load bearing surface of the coupling bolts.

General guidelines for determining if bolt pads are recommended:

Wall thickness = (pipe actual OD - shaft OD) / 2
If wall thickness is less than the bolt diameter, add bolt pads to reduce the load bearing stress on bolts and pipe.
See **Table Q** for more details.

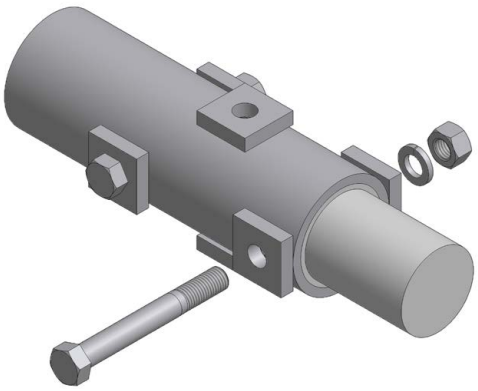

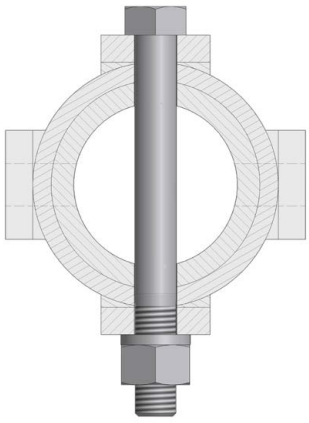

WITH BOLT PADS

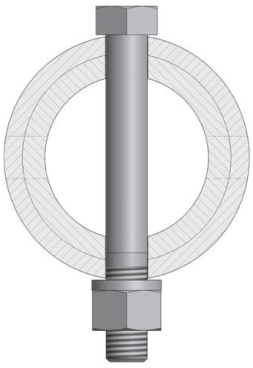

WITHOUT BOLT PADS

SHAFTS

DRIVE SHAFTS

Standard Drive Shaft

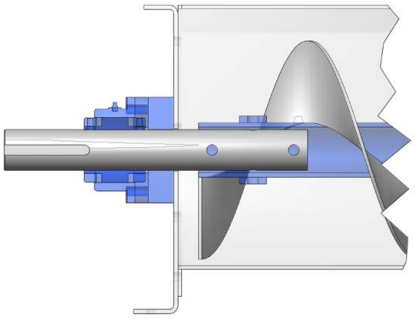

Pedestal Drive Shaft

(Helps keep bearing away from product contamination and/or heat)

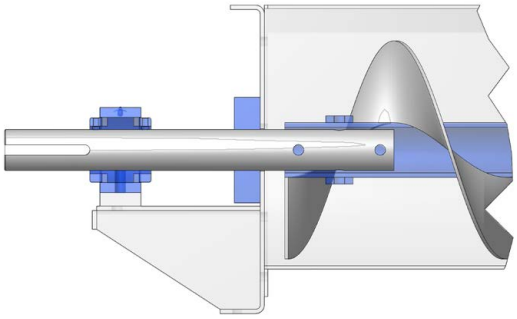

COUPLING SHAFTS

Standard Coupling Shaft

(Supported from above by a hanger)

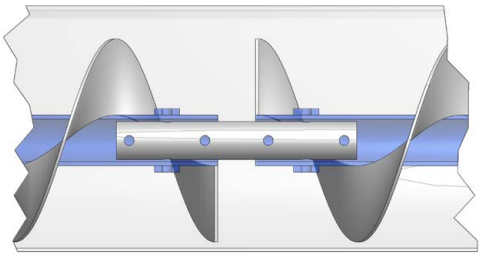

Close Coupling Shaft

(Joins screws together without hanger. Screws ride on bottom so trough is typically hardened or has wear bars/liner.)

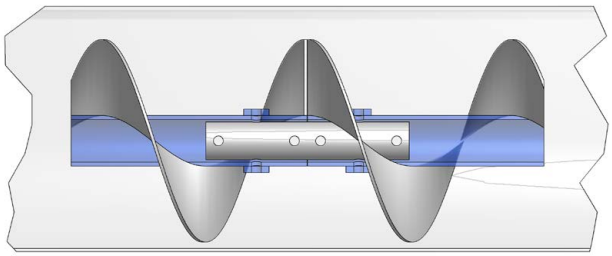

END / TAILS SHAFTS

Standard End Shaft

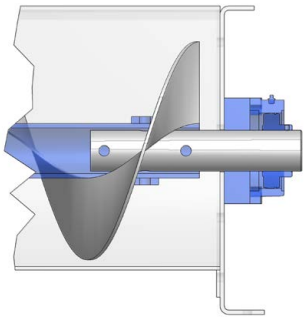

Pedestal End Shaft

(Helps keep bearing away from product contamination and/or heat)

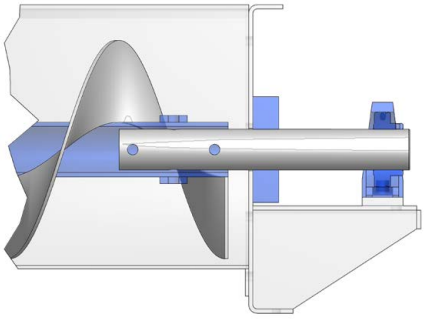

Note: For ease of maintenance, see Quick-Link shaft connection option on p.45

PHONE 319.364.5600 | 800.452.4027 **FAX** 319.364.6449

SHAFTS

DRIVE SHAFTS – STANDARD

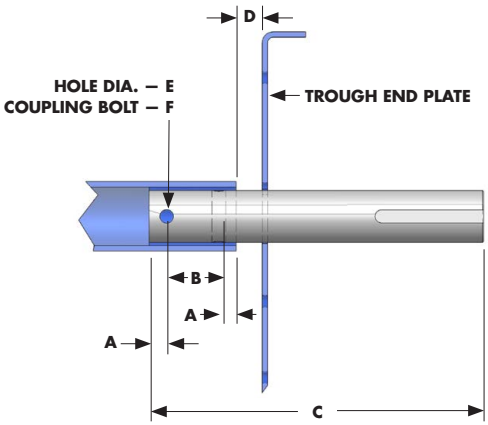

2-BOLT DRIVE SHAFT

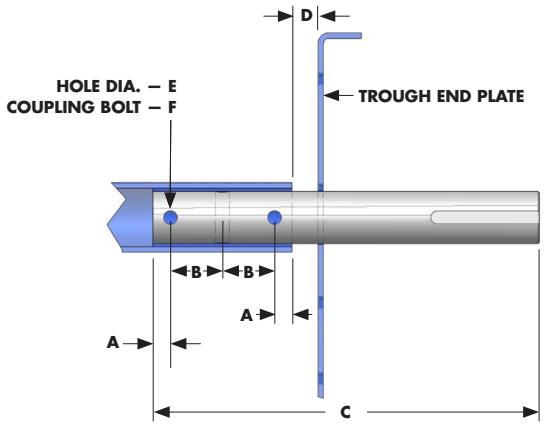

3-BOLT DRIVE SHAFT

SHAFT DIA	2-BOLT PART #	3-BOLT PART #	A	B	KEYWAY LENGTH	KEYWAY WIDTH	KEYWAY DEPTH
1 ½	CDS112	CDS112-3B	⅞	3	3 ¼	⅜	3/16
2	CDS2	CDS2-3B	⅞	3	4 ½	½	¼
2 7/16	CDS2716	CDS2716-3B	15/16	3	5 ½	⅝	5/16
3	CDS3	CDS3-3B	1	3	6 ¼	¾	⅜
3 7/16	CDS3716	CDS3716-3B	1 ½	4	7 ¼	⅞	7/16
3 15/16	-	CDS31516-3B	1 ¾	4	8 ⅝	1	½
4 7/16	-	CDS4716-3B	1 ⅞	4	9 ⅞	1	½
4 15/16	-	CDS41516-3B	2 ¼	4	9 ⅞	1 ¼	⅝
5 7/16	-	CDS5716-3B	2 ½	5	9 ⅞	1 ¼	⅝

SHAFT DIA	C 2-BOLT*	C 3-BOLT*	D	E HOLE DIA	F CPLG. BOLT	2-BOLT WEIGHT	3-BOLT WEIGHT
1 ½	14	17	1	17/32	½	6.8	8.2
2	15 ¼	18 ¼	1	21/32	⅝	13.0	15.5
2 7/16	17 ¾	20 ¾	1 ½	21/32	⅝	22.7	26.5
3	19 ¼	22 ¼	1 ½	25/32	¾	37.3	42.9
3 7/16	23 ¼	27 ¼	2	29/32	⅞	59.1	69.1
3 15/16	-	30 ⅛	2	1 3/16	1 ⅛	-	99.2
4 7/16	-	32 ⅞	2 ½	1 5/16	1 ¼	-	137.8
4 15/16	-	*	2 ½	1 9/16	1 ½	-	*
5 7/16	-	*	3	1 13/16	1 ¾	-	*

* Length sometimes varies according to set-up. Standard, stock length shown. Contact Conveyor Eng. & Mfg. for larger sizes.
Note: Snap Rings are sometimes necessary to handle thrust loads that exceeds the bearing's capability and are often required for larger inclined conveyors. Consult Conveyor Eng. & Mfg.

DRIVE SHAFTS – PEDESTAL: Consult Conveyor Eng. & Mfg. (lengths vary according to bearing, seal, shaft size, etc.)

SHAFTS

COUPLING SHAFTS – STANDARD

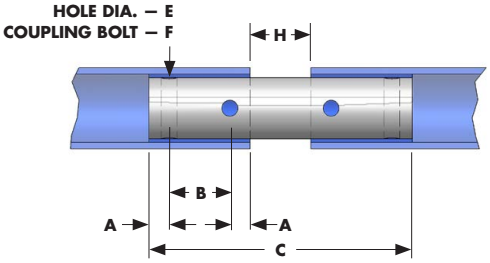

2-BOLT STANDARD COUPLING SHAFT

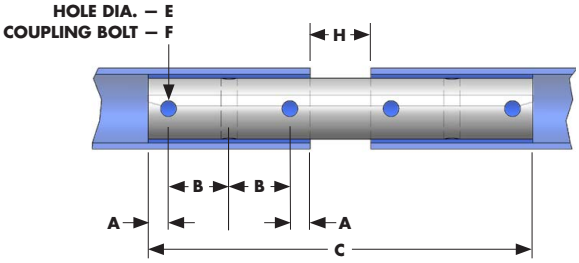

3-BOLT STANDARD COUPLING SHAFT

SHAFT DIA	2-BOLT PART #	3-BOLT PART #	A	B	C 2-BOLT	C 3-BOLT	H	E HOLE DIA	F CPLG BOLT	2-BOLT WT	3-BOLT WT
1 ½	CC112	CC112-3B	⅞	3	11 ½	17 ½	2	17⁄32	½	5.4	8.2
2	CC2	CC2-3B	⅞	3	11 ½	17 ½	2	21⁄32	⅝	9.5	14.5
2 7⁄16	CC2716	CC2716-3B	15⁄16	3	12 ¾	18 ¾	3	21⁄32	⅝	16.0	23.5
3	CC3	CC3-3B	1	3	13	19	3	25⁄32	¾	24.5	35.7
3 7⁄16	CC3716	CC3716-3B	1 ½	4	18	26	4	29⁄32	⅞	44.9	64.8
3 15⁄16	-	CC31516-3B	1 ¾	4	-	27	4	1 3⁄16	1 ⅛	-	86.1
4 7⁄16	-	CC4716-3B	1 ⅞	4	-	28 ½	5	1 5⁄16	1 ¼	-	115.2
4 15⁄16	-	CC41516-3B	2 ¼	4	-	30	5	1 9⁄16	1 ½	-	147.4
5 7⁄16	-	CC5716-3B	2 ½	5	-	36	6	1 13⁄16	1 ¾	-	214.2

Note: For ease of maintenance, see Quick-Link shaft connection option on p.45

COUPLING SHAFTS – CLOSE

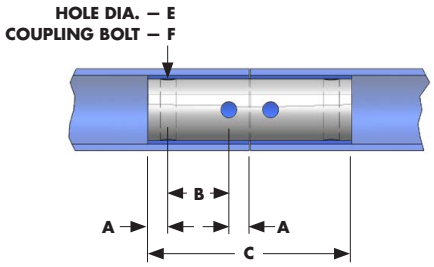

2-BOLT CLOSE COUPLING SHAFT

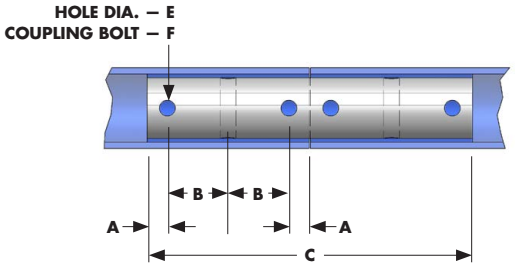

3-BOLT CLOSE COUPLING SHAFT

SHAFT DIA	2-BOLT PART #	3-BOLT PART #	A	B	C 2-BOLT	C 3-BOLT	E HOLE DIA	F CPLG BOLT	2-BOLT WT	3-BOLT WT
1 ½	CCC112	CC112-3B	⅞	3	9 9⁄16	15 9⁄16	17⁄32	½	4.4	7.3
2	CCC2	CC2-3B	⅞	3	9 9⁄16	15 9⁄16	21⁄32	⅝	7.8	12.8
2 7⁄16	CCC2716	CCC2716-3B	15⁄16	3	9 13⁄16	15 13⁄16	21⁄32	⅝	12.1	19.6
3	CCC3	CCC3-3B	1	3	10 1⁄16	16 1⁄16	25⁄32	¾	18.6	29.8
3 7⁄16	CCC3716	CCC3716-3B	1 ½	4	14 1⁄16	20 1⁄16	29⁄32	⅞	34.6	49.2

Contact Conveyor Eng. & Mfg. for larger sizes.

PHONE 319.364.5600 | 800.452.4027 **FAX** 319.364.6449

SHAFTS

END / TAIL SHAFTS – STANDARD

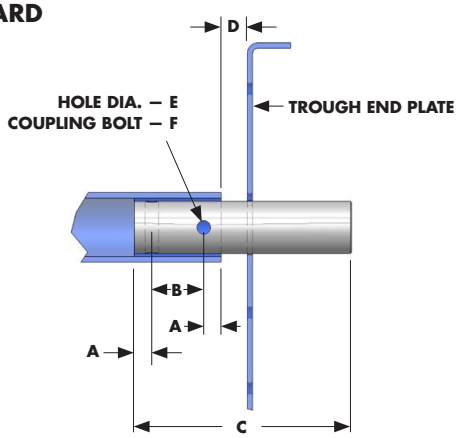

2-BOLT END SHAFT

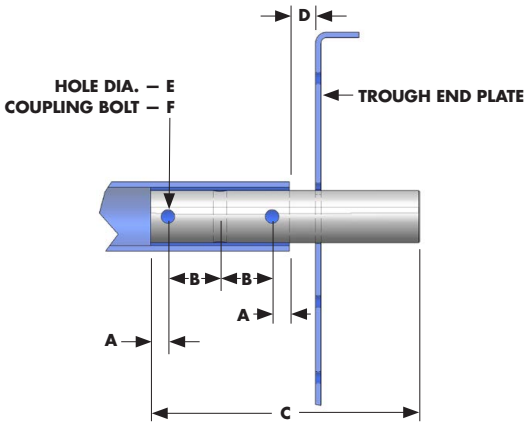

3-BOLT END SHAFT

SHAFT DIA	2-BOLT PART #	3-BOLT PART #	A	B	C 2 BOLT*	C 3 BOLT*	D	E HOLE DIA	F CPLG BOLT	2-BOLT WT	3-BOLT WT
1 ½	CES112	CES112-3B	⅞	3	10 ½	-	1	17/32	½	5.1	-
2	CES2	CES2-3B	⅞	3	10 ½	13 ½	1	21/32	⅝	9.0	11.5
2 7/16	CES2716	CES2716-3B	15/16	3	11 ¾	14 ¾	1 ½	21/32	⅝	15.1	18.8
3	CES3	CES3-3B	1	3	12 ½	15 ½	1 ½	25/32	¾	24.3	29.9
3 7/16	CES3716	CES3716-3B	1 ½	4	15 ¾	19 ¾	2	29/32	⅞	40.2	50.1
3 15/16	-	CES31516-3B	1 ¾	4	-	23 ⅝	2	1 3/16	1 ⅛	-	78.0
4 7/16	-	CES4716-3B	1 ⅞	4	-	24 ½	2 ½	1 5/16	1 ¼	-	102.5
4 15/16	-	CES41516-3B	2 ¼	4	-	*	2 ½	1 9/16	1 ½	-	*
5 7/16	-	CES5716-3B	2 ½	5	-	*	3	1 13/16	1 ¾	-	*

* Length sometimes varies according to set-up. Standard, stock length shown. Contact Conveyor Eng. & Mfg. for larger sizes.

Note: Tail shafts can be drilled and tapped on the end to allow for mounting of speed/motion sensor disk.

END SHAFTS – PEDESTAL: Consult Conveyor Eng. & Mfg. (lengths vary according to bearing, seal, shaft size, etc.)

DURA-LINK™ COUPLINGS

Dura-Links significantly reduce downtime by making shaft and screw removal much quicker and easier. A single screw section or coupling shaft can be replaced without the time consuming and costly need to move adjoining components. Lighter duty, removable key couplings have been available in the past but Dura-Links make this option available in a very sturdy design that is often necessary for critical conveyors. Contact our engineering department for more information.

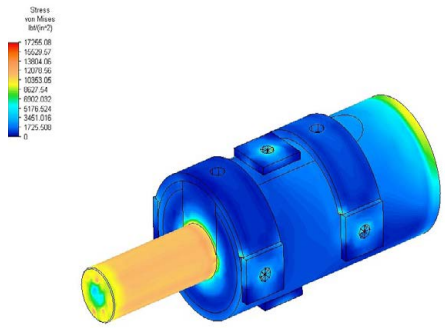

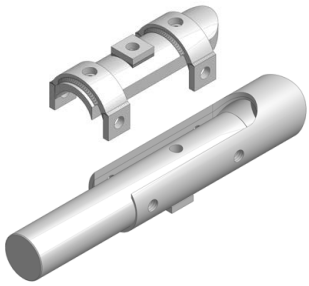

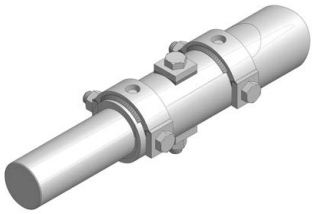

TROUGHS

(See bottom of p.27 for abrasion resistant trough options)

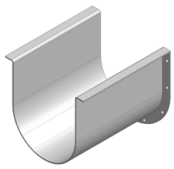	**FORMED FLANGE U-TROUGH:** Top flanges are formed from the same sheet as the rest of the trough. Easy to seal. This one piece construction makes it the most economical and widely used.
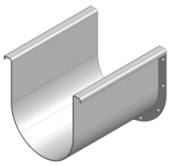	**DOUBLE FORMED FLANGE U-TROUGH:** Similar to formed flange except side flange has extra vertical bend for added strength and stiffness. Most common type for small to middle sizes.
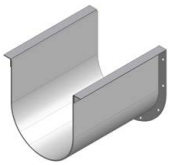	**ANGLE FLANGE U-TROUGH:** The angle flange trough is flanged with structural steel angle that is welded (skip or seam) to the top of the trough. Most common for larger sizes
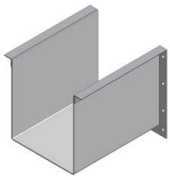	**RECTANGULAR TROUGH:** Rectangular troughs are primarily used for highly abrasive material applications. This design allows a bed of material to form on the bottom of the trough to minimize the wear to the material that would normally occur. These troughs may be constructed as formed or angle flange troughs.
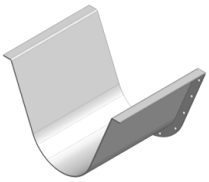	**FLARED TROUGH:** Primarily used for materials that tend to bridge over the screw.
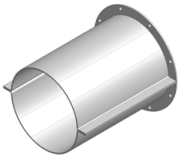	**FORMED FLANGE / ANGLE FLANGE TUBE TROUGH:** Used to minimize material fallback in incline applications. Flanges also allow trough to be dismantled for cleaning and maintenance.
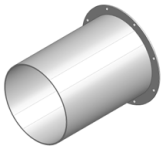	**SOLID TUBE TROUGH:** Used to minimize material fallback in incline applications. More economical than formed flange tube trough but requires removal of screw through trough end.
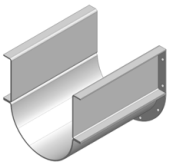	**DROP BOTTOM / CHANNEL TROUGH:** Structural steel channel is used at the top of the trough for extra strength where distance between supports are longer than standard. Also allows for bottom of trough to be removed for cleaning or replaced if worn from abrasive materials.
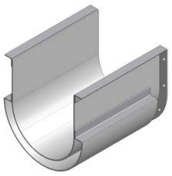	**JACKETED TROUGH:** Jackets may be added to any trough style to provide heating or cooling during conveying using hot or cold water or low pressure steam in jacketed area.

PHONE 319.364.5600 | 800.452.4027 **FAX** 319.364.6449

TROUGHS

U-TROUGHS

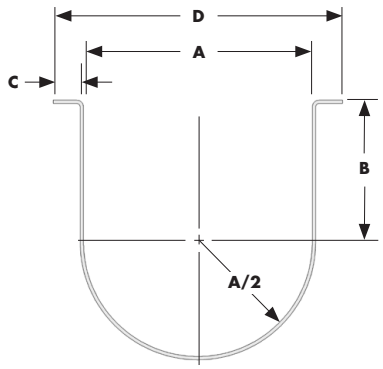

FORMED FLANGE

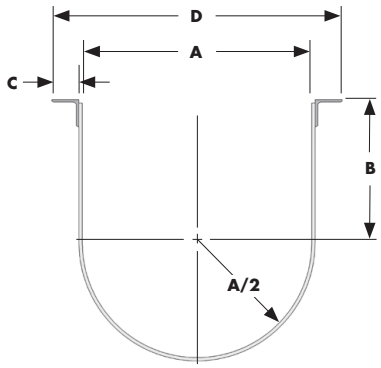

ANGLE FLANGE

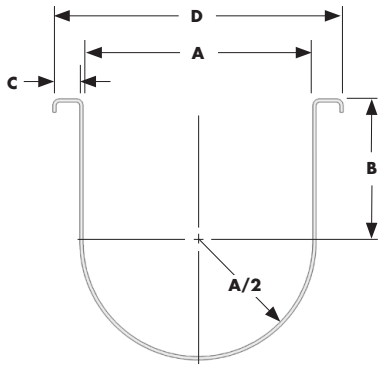

DOUBLE FORMED FLANGE

SCREW DIA	TROUGH THICKNESS	FORMED FLANGED PART #	WEIGHT STD LENGTH	ANGLE FLANGE PART #	WEIGHT STD LENGTH	DOUBLE FORMED PART #	WEIGHT STD LENGTH	A	B	C	D	STD LENGTH
6	14 ga	CTF614	62	CTA614	84	CTDF614	64	7	4 ½	1 ¼	9 11/16	10'-0"
6	12 ga	CTF612	86	CTA612	105	CTDF612	85	7	4 ½	1 ¼	9 ¾	10'-0"
6	10 ga	CTF610	109	CTA610	126	CTDF610	112	7	4 ½	1 ¼	9 13/16	10'-0"
6	3/16	CTF67	163	CTA67	174	CTDF67	168	7	4 ½	1 ¼	9 ⅞	10'-0"
9	12 ga	CTF912	118	CTA912	142	CTDF912	123	10	6 ⅛	1 ½	13 ¼	10'-0"
9	10 ga	CTF910	151	CTA910	172	CTDF910	156	10	6 ⅛	1 ½	13 5/16	10'-0"
9	3/16	CTF97	226	CTA97	239	CTDF97	234	10	6 ⅛	1 ½	13 ⅜	10'-0"
9	¼	CTF93	292	CTA93	299	CTDF93	302	10	6 ⅛	1 ½	13 ½	10'-0"
10	12 ga	CTF1012	126	CTA1012	150	CTDF1012	131	11	6 ⅜	1 ½	14 ¼	10'-0"
10	10 ga	CTF1010	161	CTA1010	182	CTDF1010	166	11	6 ⅜	1 ½	14 5/16	10'-0"
10	3/16	CTF107	241	CTA107	254	CTDF107	249	11	6 ⅜	1 ½	14 ⅜	10'-0"
10	¼	CTF103	312	CTA103	319	CTDF103	322	11	6 ⅜	1 ½	14 ½	10'-0"
12	12 ga	CTF1212	187	CTA1212	227	CTDF1212	193	13	7 ¾	2	17 ¼	12'-0"
12	10 ga	CTF1210	237	CTA1210	272	CTDF1210	244	13	7 ¾	2	17 5/16	12'-0"
12	3/16	CTF127	353	CTA127	376	CTDF127	364	13	7 ¾	2	17 ⅜	12'-0"
12	¼	CTF123	456	CTA123	469	CTDF123	467	13	7 ¾	2	17 ½	12'-0"
14	12 ga	CTF1412	216	CTA1412	256	CTDF1412	222	15	9 ¼	2	19 ¼	12'-0"
14	10 ga	CTF1410	274	CTA1410	308	CTDF1410	281	15	9 ¼	2	19 5/16	12'-0"
14	3/16	CTF147	408	CTA147	431	CTDF147	418	15	9 ¼	2	19 ⅜	12'-0"
14	¼	CTF143	526	CTA143	540	CTDF143	537	15	9 ¼	2	19 ½	12'-0"
16	10 ga	CTF1610	309	CTA1610	344	CTDF1610	316	17	10 ⅝	2	21 5/16	12'-0"
16	3/16	CTF167	460	CTA167	483	CTDF167	471	17	10 ⅝	2	21 ⅜	12'-0"
16	¼	CTF163	594	CTA163	608	CTDF163	605	17	10 ⅝	2	21 ½	12'-0"
18	10 ga	CTF1810	355	CTA1810	424	CTDF1810	362	19	12 ⅛	2 ½	24 5/16	12'-0"
18	3/16	CTF187	527	CTA187	581	CTDF187	537	19	12 ⅛	2 ½	24 ⅜	12'-0"
18	¼	CTF183	679	CTA183	721	CTDF183	690	19	12 ⅛	2 ½	24 ½	12'-0"
20	10 ga	CTF2010	391	CTA2010	459	CTDF2010	398	21	13 ½	2 ½	26 5/16	12'-0"
20	3/16	CTF207	580	CTA207	634	CTDF207	590	21	13 ½	2 ½	26 ⅜	12'-0"
20	¼	CTF203	747	CTA203	789	CTDF203	758	21	13 ½	2 ½	26 ½	12'-0"
24	10 ga	CTF2410	469	CTA2410	538	CTDF2410	475	25	16 ½	2 ½	30 5/16	12'-0"
24	3/16	CTF247	693	CTA247	748	CTDF247	704	25	16 ½	2 ½	30 ⅜	12'-0"
24	¼	CTF243	893	CTA243	935	CTDF243	904	25	16 ½	2 ½	30 ½	12'-0"
30	10 ga	CTF3010	572	CTA3010	660	CTDF3010	581	31	19 ¾	3	37 5/16	12'-0"
30	3/16	CTF307	842	CTA307	916	CTDF307	856	31	19 ¾	3	37 ⅜	12'-0"
30	¼	CTF303	1082	CTA303	1144	CTDF303	1096	31	19 ¾	3	37 ½	12'-0"
36	3/16	CTF367	1006	CTA367	1085	CTDF367	1019	37	24	3	43 ⅜	12'-0"
36	¼	CTF363	1294	CTA363	1360	CTDF363	1310	37	24	3	43 ½	12'-0"

Contact Conveyor Eng. & Mfg. for larger sizes.

TROUGHS

FLARED TROUGH

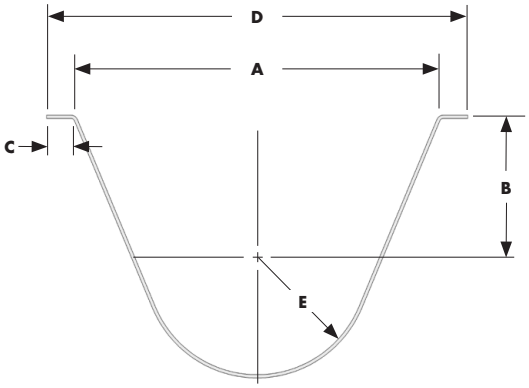

SCREW DIA	TROUGH THICKNESS	FLARED PART #	WEIGHT STD LENGTH	A	B	C	D	E	STD LENGTH
6	14 ga	CTV614	74	14	7	1 ¼	16 ⅝	3 ½	10'-0"
6	12 ga	CTV612	103	14	7	1 ¼	16 ⅝	3 ½	10'-0"
6	10 ga	CTV610	133	14	7	1 ¼	16 ⅝	3 ½	10'-0"
6	3/16	CTV67	186	14	7	1 ¼	16 ⅝	3 ½	10'-0"
9	12 ga	CTV912	136	18	9	1 ½	21 ¼	5	10'-0"
9	10 ga	CTV910	175	18	9	1 ½	21 ¼	5	10'-0"
9	3/16	CTV97	244	18	9	1 ½	21 ⅜	5	10'-0"
9	¼	CTV93	325	18	9	1 ½	21 ⅜	5	10'-0"
10	12 ga	CTV1012	147	20	9 ½	1 ½	23 3/16	5 ½	10'-0"
10	10 ga	CTV1010	188	20	9 ½	1 ½	23 ¼	5 ½	10'-0"
10	3/16	CTV107	262	20	9 ½	1 ½	23 ⅜	5 ½	10'-0"
10	¼	CTV103	350	20	9 ½	1 ½	23 ½	5 ½	10'-0"
12	12 ga	CTV1212	197	22	10	2	26 ¼	6 ½	12'-0"
12	10 ga	CTV1210	254	22	10	2	26 ¼	6 ½	12'-0"
12	3/16	CTV127	354	22	10	2	26 ¼	6 ½	12'-0"
12	¼	CTV123	472	22	10	2	26 ⅜	6 ½	12'-0"
14	12 ga	CTV1412	219	24	11	2	28 ¼	7 ½	12'-0"
14	10 ga	CTV1410	281	24	11	2	28 ¼	7 ½	12'-0"
14	3/16	CTV147	392	24	11	2	28 ¼	7 ½	12'-0"
14	¼	CTV143	523	24	11	2	28 ⅜	7 ½	12'-0"
16	10 ga	CTV1610	307	28	11 ½	2	32 ¼	8 ½	12'-0"
16	3/16	CTV167	429	28	11 ½	2	32 ⅜	8 ½	12'-0"
16	¼	CTV163	572	28	11 ½	2	32 ½	8 ½	12'-0"
18	10 ga	CTV1810	338	31	12 ⅛	2 ½	36 ¼	9 ½	12'-0"
18	3/16	CTV187	472	31	12 ⅛	2 ½	36 ⅜	9 ½	12'-0"
18	¼	CTV183	629	31	12 ⅛	2 ½	36 ½	9 ½	12'-0"
20	10 ga	CTV2010	372	34	13 ½	2 ½	39 ¼	10 ½	12'-0"
20	3/16	CTV207	518	34	13 ½	2 ½	39 ⅜	10 ½	12'-0"
20	¼	CTV203	691	34	13 ½	2 ½	39 ½	10 ½	12'-0"
24	10 ga	CTV2410	440	40	16 ½	2 ½	45 ¼	12 ½	12'-0"
24	3/16	CTV247	614	40	16 ½	2 ½	45 ⅜	12 ½	12'-0"
24	¼	CTV243	819	40	16 ½	2 ½	45 ½	12 ½	12'-0"
30	10 ga	CTV3010	548	49	19 ¾	2 ½	54 3/16	15 ½	12'-0"
30	3/16	CTV307	764	49	19 ¾	2 ½	54 ¼	15 ½	12'-0"
30	¼	CTV303	1020	49	19 ¾	2 ½	54 3/16	15 ½	12'-0"
36	3/16	CTV367	846	59	24	3	65 ¼	18 ½	12'-0"
36	¼	CTV363	1153	59	24	3	65 5/16	18 ½	12'-0"

Contact Conveyor Eng. & Mfg. for larger sizes.

PHONE 319.364.5600 | 800.452.4027 **FAX** 319.364.6449

TROUGHS

DROP BOTTOM / CHANNEL

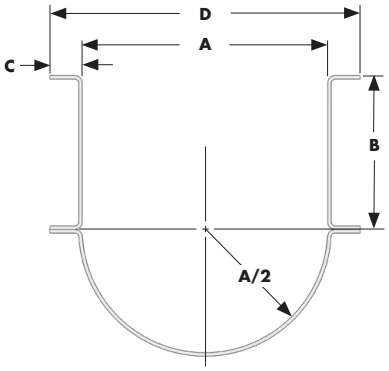

SCREW DIA	TROUGH THICKNESS	CHANNEL PART #	WEIGHT STD LENGTH	A	B	C	D	STANDARD LENGTH
6	14 ga	CTDB614	64	7	4 ½	1 ¼	9 11/16	10'-0"
6	12 ga	CTDB612	88	7	4 ½	1 ¼	9 ¾	10'-0"
6	10 ga	CTDB610	115	7	4 ½	1 ¼	9 13/16	10'-0"
6	3/16	CTDB67	173	7	4 ½	1 ¼	9 ⅞	10'-0"
9	12 ga	CTDB912	127	10	6 ⅛	1 ½	13 ¼	10'-0"
9	10 ga	CTDB910	160	10	6 ⅛	1 ½	13 5/16	10'-0"
9	3/16	CTDB97	241	10	6 ⅛	1 ½	13 ⅜	10'-0"
9	¼	CTDB93	311	10	6 ⅛	1 ½	13 ½	10'-0"
10	12 ga	CTDB1012	135	11	6 ⅜	1 ½	14 ¼	10'-0"
10	10 ga	CTDB1010	171	11	6 ⅜	1 ½	14 5/16	10'-0"
10	3/16	CTDB107	256	11	6 ⅜	1 ½	14 ⅜	10'-0"
10	¼	CTDB103	331	11	6 ⅜	1 ½	14 ½	10'-0"
12	12 ga	CTDB1212	199	13	7 ¾	2	17 ¼	12'-0"
12	10 ga	CTDB1210	251	13	7 ¾	2	17 5/16	12'-0"
12	3/16	CTDB127	375	13	7 ¾	2	17 ⅜	12'-0"
12	¼	CTDB123	481	13	7 ¾	2	17 ½	12'-0"
14	12 ga	CTDB1412	229	15	9 ¼	2	19 ¼	12'-0"
14	10 ga	CTDB1410	289	15	9 ¼	2	19 5/16	12'-0"
14	3/16	CTDB147	430	15	9 ¼	2	19 ⅜	12'-0"
14	¼	CTDB143	553	15	9 ¼	2	19 ½	12'-0"
16	10 ga	CTDB1610	325	17	10 ⅝	2	21 5/16	12'-0"
16	3/16	CTDB167	485	17	10 ⅝	2	21 ⅜	12'-0"
16	¼	CTDB163	623	17	10 ⅝	2	21 ½	12'-0"
18	10 ga	CTDB1810	373	19	12 ⅛	2 ½	24 5/16	12'-0"
18	3/16	CTDB187	553	19	12 ⅛	2 ½	24 ⅜	12'-0"
18	¼	CTDB183	710	19	12 ⅛	2 ½	24 ½	12'-0"
20	10 ga	CTDB2010	410	21	13 ½	2 ½	26 5/16	12'-0"
20	3/16	CTDB207	608	21	13 ½	2 ½	26 ⅜	12'-0"
20	¼	CTDB203	780	21	13 ½	2 ½	26 ½	12'-0"
24	10 ga	CTDB2410	489	25	16 ½	2 ½	30 5/16	12'-0"
24	3/16	CTDB247	726	25	16 ½	2 ½	30 ⅜	12'-0"
24	¼	CTDB243	931	25	16 ½	2 ½	30 ½	12'-0"

Contact Conveyor Eng. & Mfg. for larger sizes.

TROUGHS

TUBE

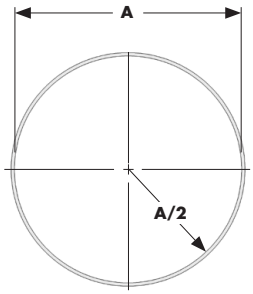

STANDARD

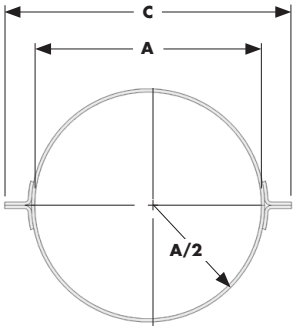

ANGLE FLANGE

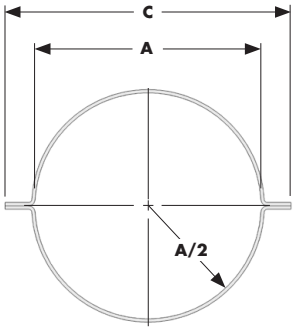

FORMED FLANGE

SCREW DIA	HOUSING THICKNESS	TUBE PART #	WEIGHT STD LENGTH	ANGLE FLANGE PART #	WEIGHT STD LENGTH	FORMED FLANGE PART #	WEIGHT STD LENGTH	A	B	C	STD LENGTH
6	14 ga	CTT614	61	CTTA614	91	CTTF614	75	7	1 ¼	9 11/16	10'-0"
6	12 ga	CTT612	84	CTTA612	114	CTTF612	103	7	1 ¼	9 ¾	10'-0"
6	10 ga	CTT610	108	CTTA610	137	CTTF610	131	7	1 ¼	9 13/16	10'-0"
6	3/16	CTT67	161	CTTA67	190	CTTF67	197	7	1 ¼	9 ⅞	10'-0"
9	12 ga	CTT912	122	CTTA912	157	CTTF912	144	10	1 ½	13 ¼	10'-0"
9	10 ga	CTT910	154	CTTA910	190	CTTF910	183	10	1 ½	13 5/16	10'-0"
9	3/16	CTT97	231	CTTA97	267	CTTF97	274	10	1 ½	13 ⅜	10'-0"
9	¼	CTT93	298	CTTA93	334	CTTF93	354	10	1 ½	13 ½	10'-0"
10	12 ga	CTT1012	133	CTTA1012	169	CTTF1012	155	11	1 ½	14 ¼	10'-0"
10	10 ga	CTT1010	170	CTTA1010	206	CTTF1010	198	11	1 ½	14 5/16	10'-0"
10	3/16	CTT107	254	CTTA107	289	CTTF107	296	11	1 ½	14 ⅜	10'-0"
10	¼	CTT103	328	CTTA103	364	CTTF103	384	11	1 ½	14 ½	10'-0"
12	12 ga	CTT1212	194	CTTA1212	252	CTTF1212	229	13	2	17 ¼	12'-0"
12	10 ga	CTT1210	245	CTTA1210	304	CTTF1210	291	13	2	17 5/16	12'-0"
12	3/16	CTT127	364	CTTA127	423	CTTF127	433	13	2	17 ⅜	12'-0"
12	¼	CTT123	470	CTTA123	528	CTTF123	559	13	2	17 ½	12'-0"
14	12 ga	CTT1412	223	CTTA1412	282	CTTF1412	259	15	2	19 ¼	12'-0"
14	10 ga	CTT1410	283	CTTA1410	341	CTTF1410	328	15	2	19 5/16	12'-0"
14	3/16	CTT147	420	CTTA147	478	CTTF147	488	15	2	19 ⅜	12'-0"
14	¼	CTT143	541	CTTA143	600	CTTF143	631	15	2	19 ½	12'-0"
16	10 ga	CTT1610	320	CTTA1610	379	CTTF1610	365	17	2	21 5/16	12'-0"
16	3/16	CTT167	475	CTTA167	534	CTTF167	544	17	2	21 ⅜	12'-0"
16	¼	CTT163	613	CTTA163	672	CTTF163	703	17	2	21 ½	12'-0"
18	10 ga	CTT1810	362	CTTA1810	461	CTTF1810	419	19	2 ½	24 5/16	12'-0"
18	3/16	CTT187	536	CTTA187	635	CTTF187	622	19	2 ½	24 ⅜	12'-0"
18	¼	CTT183	690	CTTA183	789	CTTF183	802	19	2 ½	24 ½	12'-0"
20	10 ga	CTT2010	400	CTTA2010	499	CTTF2010	457	21	2 ½	26 5/16	12'-0"
20	3/16	CTT207	592	CTTA207	691	CTTF207	678	21	2 ½	26 ⅜	12'-0"
20	¼	CTT203	763	CTTA203	861	CTTF203	874	21	2 ½	26 ½	12'-0"
24	10 ga	CTT2410	476	CTTA2410	574	CTTF2410	533	25	2 ½	30 5/16	12'-0"
24	3/16	CTT247	705	CTTA247	803	CTTF247	790	25	2 ½	30 ⅜	12'-0"
24	¼	CTT243	907	CTTA243	1006	CTTF243	1018	25	2 ½	30 ½	12'-0"

Contact Conveyor Eng. & Mfg. for larger sizes.

PHONE 319.364.5600 | 800.452.4027 **FAX** 319.364.6449

MOUNTING FEET

FLANGE FOOT

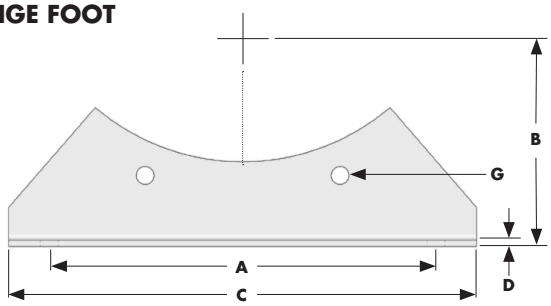

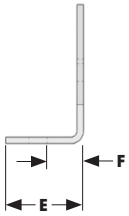

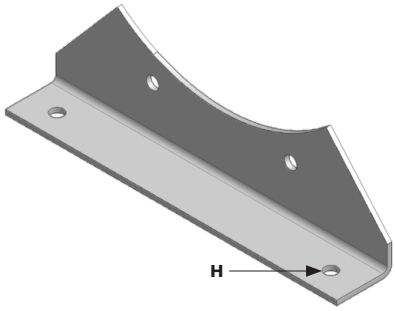

SCREW DIA	PART #	A	B	C	D	E	F	G (BOLTS)	H (BOLTS)	WEIGHT
6	CFF6	8 ⅛	5 ⅝	10	3/16	1 ½	13/16	⅜	⅜	2.0
9	CFF9	9 ⅜	7 ⅞	12	3/16	2 ½	1 5/16	⅜	½	3.0
10	CFF10	9 ½	8 ⅞	12 ⅜	3/16	2 ½	1 9/16	⅜	⅝	5.0
12	CFF12	12 ¼	9 ⅝	15	¼	2 ½	1 ⅜	½	⅝	6.0
14	CFF14	13 ½	10 ⅞	16 ½	¼	2 ½	1 ⅜	½	⅝	7.0
16	CFF16	14 ⅞	12	18	¼	3	1 ¾	⅝	⅝	7.5
18	CFF18	16	13 ⅜	19 ⅛	¼	3	1 ¾	⅝	⅝	9.5
20	CFF20	19 ¼	15	22 ¾	¼	3 ½	2	⅝	¾	12.5
24	CFF24	20	18 ⅛	24	¼	4	2 ¼	⅝	¾	14.5
30	CFF30	24	21 ½	28	⅜	4 ⅛	2 ½	⅝	¾	34.0
36	CFF36	*27, 35	26	31	⅜	4	2 ⅜	*⅝ (4)	*1 (4)	40.5

*CS36 requires (4) H bolts, (2) with an "A" dimension of 27" and (2) with an "A" dimension of 35"

SADDLE

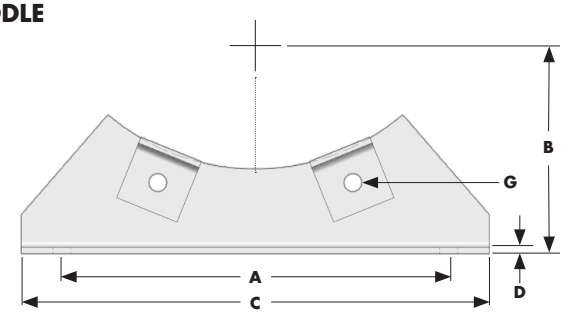

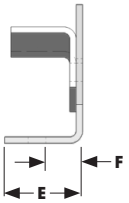

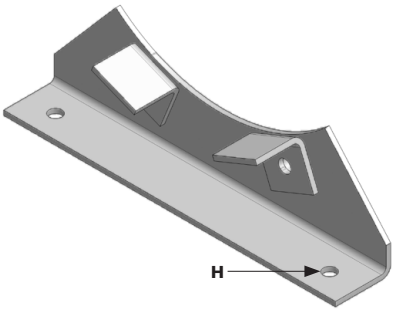

SCREW DIA	PART #	A	B	C	D	E	F	G (BOLTS)	H (BOLTS)	WEIGHT
6	CS6	8 ⅛	5 ⅝	10	3/16	1 ½	13/16	⅜	⅜	2.5
9	CS9	9 ⅜	7 ⅞	12	3/16	2 ½	1 5/16	⅜	½	3.5
10	CS10	9 ½	8 ⅞	12 ⅜	3/16	2 ½	1 9/16	⅜	⅝	5.5
12	CS12	12 ¼	9 ⅝	15	¼	2 ½	1 ⅜	½	⅝	7.0
14	CS14	13 ½	10 ⅞	16 ½	¼	2 ½	1 ⅜	½	⅝	8.0
16	CS16	14 ⅞	12	18	¼	3	1 ¾	⅝	⅝	8.7
18	CS18	16	13 ⅜	19 ⅛	¼	3	1 ¾	⅝	⅝	10.7
20	CS20	19 ¼	15	22 ¾	¼	3 ½	2	⅝	¾	13.7
24	CS24	20	18 ⅛	24	¼	4	2 ¼	⅝	¾	15.7
30	CS30	24	21 ½	28	⅜	4 ⅛	2 ½	⅝	¾	35.8
36	CS36	*27, 35	26	31	⅜	4	2 ⅜	*⅝ (4)	*1 (4)	44.1

*CS36 requires (4) H bolts, (2) with an "A" dimension of 27" and (2) with an "A" dimension of 35"

END PLATES

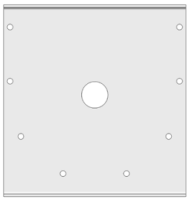	**TROUGH END PLATE WITH FOOT:** Our most common end plate design for U-troughs. The integral foot design eliminates the need for saddles or feet at the screw conveyor ends. Also provides additional structure for support of drive mechanisms. Can be ordered with pedestal bearing mounts.
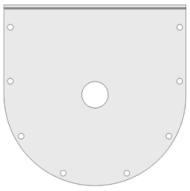	**TROUGH END PLATE WITHOUT FOOT:** Can be used when other means of support are provided, such as saddles.
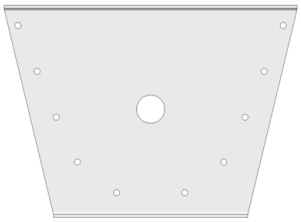	**FLARED TROUGH END PLATE WITH FOOT:** Used in the same situations as above (with foot) when used with flared trough. Can be ordered with pedestal bearing mounts.
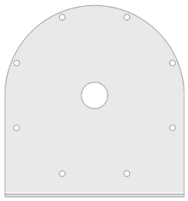	**TUBE TROUGH END PLATE WITH FOOT:** The integral foot eliminates the need for saddles at the end of tubular trough screw conveyors. Can be ordered with pedestal bearing mounts.
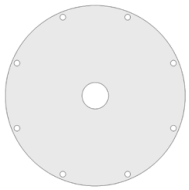	**TUBE TROUGH END PLATE:** Used when other means are provided for trough support. This end plate allows ease of maintenance when a flange foot is installed at the trough end. The end plate can be removed without providing temporary trough support.
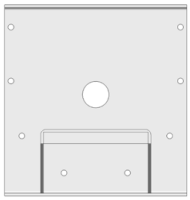	**TROUGH END PLATE WITH FOOT AND PEDESTAL BEARING MOUNT:** The pedestal pillow block mount allows clearance for packing gland seals or when frequent seal maintenance is required. This is also useful for bearing isolation from damaging product or temperature extremes. Pedestals can also be ordered on other end plate styles.

PHONE 319.364.5600 | 800.452.4027 **FAX** 319.364.6449

END PLATES

U-TROUGH STYLE

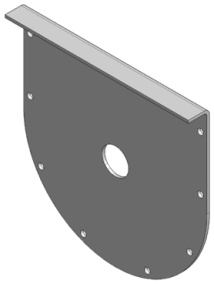

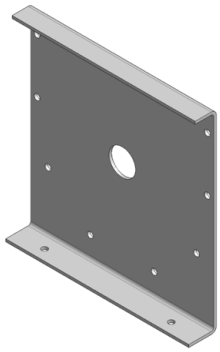

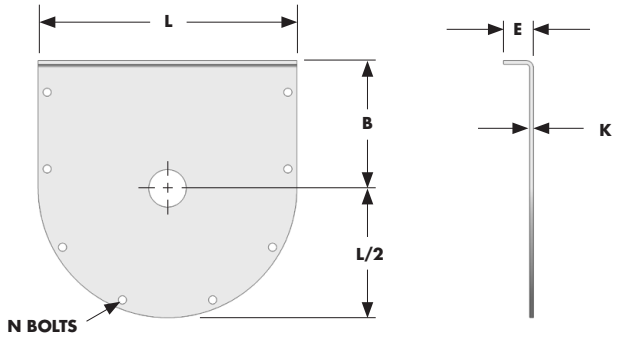

"CE" W/O FOOT

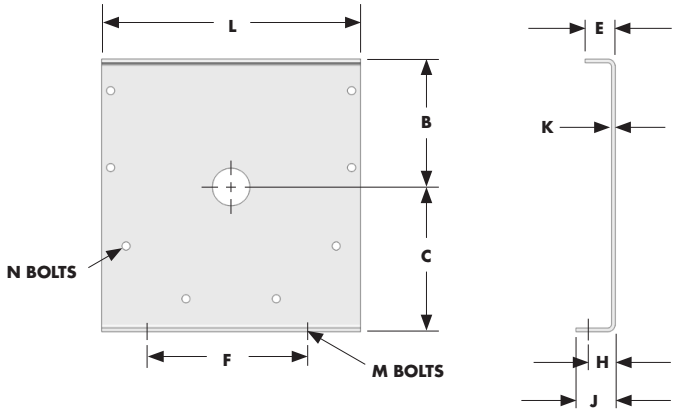

"CEF" W/ FOOT

SIZE	SHAFT DIA	PART # (W/O FOOT)	PART # (W/ FOOT)	B	C	E	F	H	J	K	L	M (BOLT)	N (BOLT)	"CE" WT	"CEF" WT
6	1 ½	CE6112	CEF6112	4 ½	5 ⅝	1 ½	8 ⅛	1	1 ¾	3/16	9 ⅞	⅜	⅜	5	7
9	1 ½	CE9112	CEF9112	6 ⅛	7 ⅞	1 ⅝	9 ⅜	1 ½	2 ⅝	¼	13 ½	½	⅜	12	17
9	2	CE92	CEF92	6 ⅛	7 ⅞	1 ⅝	9 ⅜	1 ½	2 ⅝	¼	13 ½	½	⅜	12	17
10	1 ½	CE10112	CEF10112	6 ⅜	8 ⅞	1 ¾	9 ½	1 ¾	2 ⅞	¼	14 ½	½	⅜	14	20
10	2	CE102	CEF102	6 ⅜	8 ⅞	1 ¾	9 ½	1 ¾	2 ⅞	¼	14 ½	½	⅜	14	20
12	2	CE122	CEF122	7 ¾	9 ⅝	2	12 ¼	1 ⅝	2 ¾	¼	17 ½	⅝	½	20	26
12	2 7/16	CE122716	CEF122716	7 ¾	9 ⅝	2	12 ¼	1 ⅝	2 ¾	¼	17 ½	⅝	½	20	26
12	3	CE123	CEF123	7 ¾	9 ⅝	2	12 ¼	1 ⅝	2 ¾	¼	17 ½	⅝	½	20	26
14	2 7/16	CE142716	CEF142716	9 ¼	10 ⅞	2	13 ½	1 ⅝	2 ⅞	5/16	19 ½	⅝	½	32	42
14	3	CE143	CEF143	9 ¼	10 ⅞	2	13 ½	1 ⅝	2 ⅞	5/16	19 ½	⅝	½	32	42
16	3	CE163	CEF163	10 ⅝	12	2 ½	14 ⅞	2	3 ¼	5/16	21 ½	⅝	⅝	40	53
18	3	CE183	CEF183	12 ⅛	13 ⅜	2 ½	16	2	3 ¼	⅜	24 ½	⅝	⅝	62	79
18	3 7/16	CE183716	CEF183716	12 ⅛	13 ⅜	2 ½	16	2	3 ¼	⅜	24 ½	⅝	⅝	62	79
20	3	CE203	CEF203	13 ½	15	2 ½	19 ¼	2 ¼	3 ¾	⅜	26 ½	¾	⅝	74	96
20	3 7/16	CE203716	CEF203716	13 ½	15	2 ½	19 ¼	2 ¼	3 ¾	⅜	26 ½	¾	⅝	74	96
24	3 7/16	CE243716	CEF243716	16 ½	18 ⅛	2 ½	20	2 ½	4 ⅛	⅜	30 ½	¾	⅝	100	132
24	3 15/16	CE2431516	CEF2431516	16 ½	18 ⅛	2 ½	20	2 ½	4 ⅛	⅜	30 ½	¾	⅝	100	132
30	3 7/16	CE303716	CEF303716	19 ¾	21 ½	2 ½	24	2 ¾	4 ⅜	⅜	37 ½	¾	⅝	148	190
30	3 15/16	CE3031516	CEF3031516	19 ¾	21 ½	2 ½	24	2 ¾	4 ⅜	⅜	37 ½	¾	⅝	148	190
36	3 15/16	CE3631516	CEF3631516	24	26	2 ½	27, 35	2 ¾	4 ⅜	½	43 ¾	1(4)	⅝	270	349
36	4 7/16	CE364716	CEF364716	24	26	2 ½	27, 35	2 ¾	4 ⅜	½	43 ¾	1(4)	⅝	270	349

See p.86 for end flange bolt pattern. Contact Conveyor Eng. & Mfg. for larger sizes.

END PLATES

U-TROUGH STYLE W/PEDESTAL BEARING

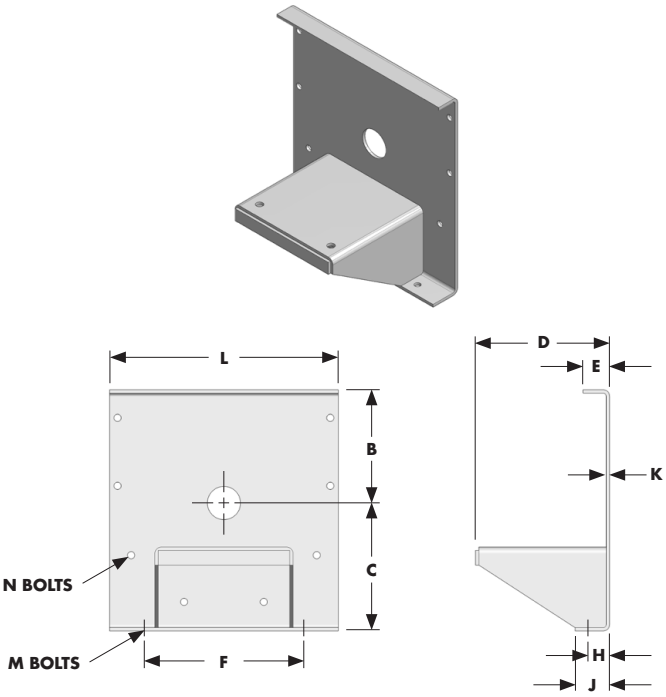

STANDARD (sizes 14″ and below)

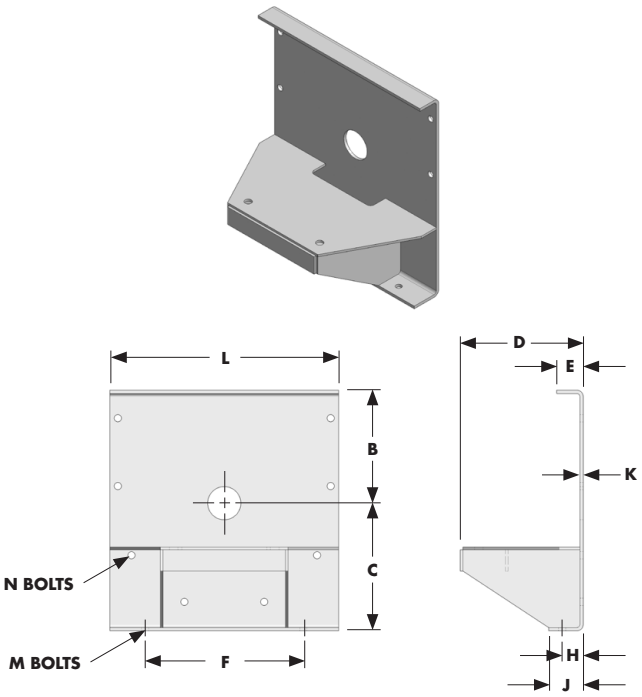

HEAVY DUTY (sizes 16″ and above)

SIZE	SHAFT DIA	PART #	B	C	D*	E	F	H	J	K	L	M	N	WT (LB)
6	1 ½	CEFP6112	4 ½	5 ⅝	11 ¼	1 ½	8 ⅛	1	1 ¾	3⁄16	9 ⅞	⅜	⅜	21
9	1 ½	CEFP9112	6 ⅛	7 ⅞	11 ¼	1 ⅝	9 ⅜	1 ½	2 ⅝	¼	13 ½	½	⅜	33
9	2	CEFP92	6 ⅛	7 ⅞	11 ½	1 ⅝	9 ⅜	1 ½	2 ⅝	¼	13 ½	½	⅜	33
10	1 ½	CEFP10112	6 ⅜	8 ⅞	11 ¼	1 ¾	9 ½	1 ¾	2 ⅞	¼	14 ½	½	⅜	39
10	2	CEFP102	6⅜	8 ⅞	11 ½	1 ¾	9 ½	1 ¾	2 ⅞	¼	14 ½	½	⅜	39
12	2	CEFP122	7 ¾	9 ⅝	11 ½	2	12 ¼	1 ⅝	2 ¾	¼	17 ½	⅝	½	42
12	2 7⁄16	CEFP122716	7 ¾	9 ⅝	11 ⅜	2	12 ¼	1 ⅝	2 ¾	¼	17 ½	⅝	½	49
12	3	CEFP123	7 ¾	9 ⅝	12 ¼	2	12 ¼	1 ⅝	2 ¾	¼	17 ½	⅝	½	49
14	2 7⁄16	CEFP142716	9 ¼	10 ⅞	12	2	13 ½	1 ⅝	2 ⅞	5⁄16	19 ½	⅝	½	76
14	3	CEFP143	9 ¼	10 ⅞	12 ⅜	2	13 ½	1 ⅝	2 ⅞	5⁄16	19 ½	⅝	½	76
16	3	CEFP163	10 ⅝	12	12 ⅜	2 ½	14 ⅞	2	3 ¼	5⁄16	21 ½	⅝	⅝	100
18	3	CEFP183	12 ⅛	13 ⅜	12 ½	2 ½	16	2	3 ¼	⅜	24 ½	⅝	⅝	149
18	3 7⁄16	CEFP183716	12 ⅛	13 ⅜	13	2 ½	16	2	3 ¼	⅜	24 ½	⅝	⅝	156
20	3	CEFP203	13 ½	15	12 ½	2 ½	19 ¼	2 ¼	3 ¾	⅜	26 ½	¾	⅝	176
20	3 7⁄16	CEFP203716	13 ½	15	13	2 ½	19 ¼	2 ¼	3 ¾	⅜	26 ½	¾	⅝	177
24	3 7⁄16	CEFP243716	16 ½	18 ⅛	13	2 ½	20	2 ½	4 ⅛	⅜	30 ½	¾	⅝	228
24	3 15⁄16	CEFP2431516	16 ½	18 ⅛	14	2 ½	20	2 ½	4 ⅛	⅜	30 ½	¾	⅝	241
30	3 7⁄16	CEFP303716	19 ¾	21 ½	13	2 ½	24	2 ¾	4 ⅜	⅜	37 ½	¾	⅝	300
30	3 15⁄16	CEFP3031516	19 ¾	21 ½	14	2 ½	24	2 ¾	4 ⅜	⅜	37 ½	¾	⅝	307
36	3 15⁄16	CEFP3631516	24	26	14 ¼	2 ½	27, 35	2 ¾	4 ⅜	½	43 ¾	1(4)	⅝	459
36	4 7⁄16	CEFP364716	24	26	14 ½	2 ½	27, 35	2 ¾	4 ⅜	½	43 ¾	1(4)	⅝	459

* “D” Dimension shown is for packing gland seal clearance. For clearance of other seals, contact Conveyor Eng. & Mfg.
See p.86 for end flange bolt pattern. Contact Conveyor Eng. & Mfg. for larger sizes.

PHONE 319.364.5600 | 800.452.4027 **FAX** 319.364.6449

END PLATES

FLARED TROUGH STYLE

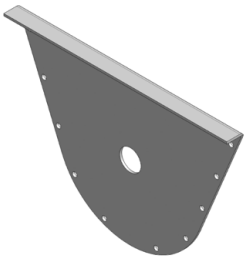

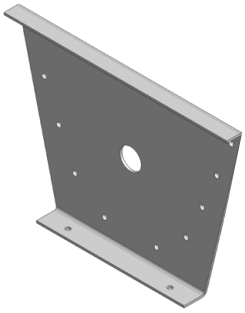

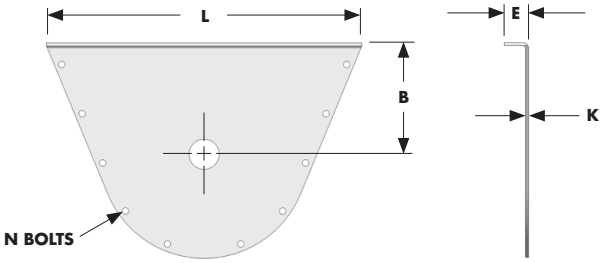

"CEV" W/O FOOT

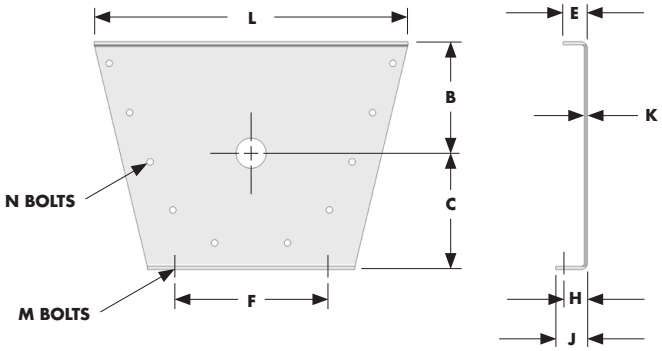

"CEFV" W/ FOOT

SIZE	SHAFT DIA	PART # (W/O FOOT)	PART # (W/ FOOT)	B	C	E	F	H	J	K	L	M BOLT	N BOLT	"CEV" WT	"CEFV" WT
6	1 ½	CEV6112	CEFV6112	7	5 ⅝	1 ½	8 ⅛	1	1 ¾	3/16	16 ⅝	⅜	⅜	8	11
9	1 ½	CEV9112	CEFV9112	9	7 ⅞	1 ⅝	9 ⅜	1 ½	2 ⅝	¼	21 ¼	½	⅜	19	25
9	2	CEV92	CEFV92	9	7 ⅞	1 ⅝	9 ⅜	1 ½	2 ⅝	¼	21 ¼	½	⅜	19	25
10	1 ½	CEV10112	CEFV10112	9 ½	8 ⅞	1 ¾	9 ½	1 ¾	2 ⅞	¼	23 ½	½	⅜	22	30
10	2	CEV102	CEFV102	9 ½	8 ⅞	1 ¾	9 ½	1 ¾	2 ⅞	¼	23 ½	½	⅜	22	30
12	2	CEV122	CEFV122	10	9 ⅝	2	12 ¼	1 ⅝	2 ¾	¼	26 ⅜	⅝	½	28	37
12	2 7/16	CEV122716	CEFV122716	10	9 ⅝	2	12 ¼	1 ⅝	2 ¾	¼	26 ⅜	⅝	½	28	37
12	3	CEV123	CEFV123	10	9 ⅝	2	12 ¼	1 ⅝	2 ¾	¼	26 ⅜	⅝	½	28	37
14	2 7/16	CEV142716	CEFV142716	11	10 ⅞	2	13 ½	1 ⅝	2 ⅞	5/16	28 ⅜	⅝	½	42	55
14	3	CEV143	CEFV143	11	10 ⅞	2	13 ½	1 ⅝	2 ⅞	5/16	28 ⅜	⅝	½	42	55
16	3	CEV163	CEFV163	11 ½	12	2 ½	14 ⅞	2	3 ¼	5/16	32 ½	⅝	⅝	52	67
18	3	CEV183	CEFV183	12 ⅛	13 ⅜	2 ½	16	2	3 ¼	⅜	36 ½	⅝	⅝	75	104
18	3 7/16	CEV183716	CEFV183716	12 ⅛	13 ⅜	2 ½	16	2	3 ¼	⅜	36 ½	⅝	⅝	75	104
20	3	CEV203	CEFV203	13 ½	15	2 ½	19 ¼	2 ¼	3 ¾	⅜	39 ½	¾	⅝	88	119
20	3 7/16	CEV203716	CEFV203716	13 ½	15	2 ½	19 ¼	2 ¼	3 ¾	⅜	39 ½	¾	⅝	88	119
24	3 7/16	CEV243716	CEFV243716	16 ½	18 ⅛	2 ½	20	2 ½	4 ⅛	⅜	45 ½	¾	⅝	120	164
24	3 15/16	CEV2431516	CEFV2431516	16 ½	18 ⅛	2 ½	20	2 ½	4 ⅛	⅜	45 ½	¾	⅝	120	164
30	3 7/16	CEV303716	CEFV303716	19 ¾	21 ½	2 ½	24	2 ¾	4 ⅜	⅜	54 ¾	¾	⅝	174	192
30	3 15/16	CEV3031516	CEFV3031516	19 ¾	21 ½	2 ½	24	2 ¾	4 ⅜	⅜	54 ¾	¾	⅝	174	192
36	3 15/16	CEV3631516	CEFV3631516	24	26	2 ½	27, 35	2 ¾	4 ⅜	½	65 ¾	1(4)	⅝	323	350
36	4 7/16	CEV364716	CEFV364716	24	26	2 ½	27, 35	2 ¾	4 ⅜	½	65 ¾	1(4)	⅝	323	350

See p.87 for end flange bolt pattern. Contact Conveyor Eng. & Mfg. for larger sizes. Contact Conveyor Eng. & Mfg. for larger sizes.

END PLATES

FLARED TROUGH STYLE W/PEDESTAL BRG.

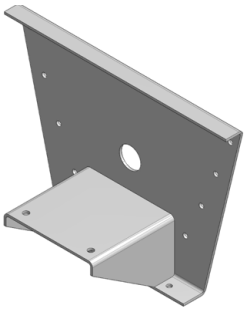

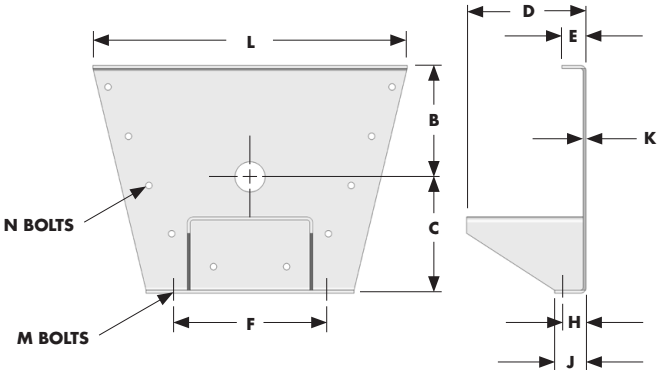

STANDARD (sizes 14" and below)

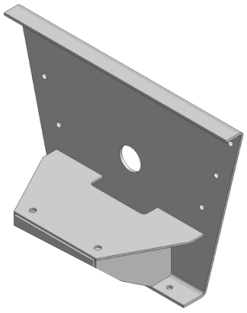

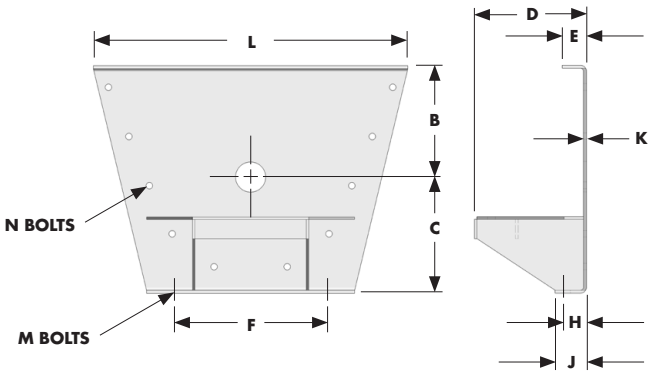

HEAVY DUTY (sizes 16" and above)

SIZE	SHAFT DIA	PART #	B	C	D*	E	F	H	J	K	L	M	N	WT (LB)
6	1 ½	CEFVP6112	7	5 ⅝	11 ¼	1 ½	8 ⅛	1	1 ¾	3⁄16	16 ⅝	⅜	⅜	25
9	1 ½	CEFVP9112	9	7 ⅞	11 ¼	1 ⅝	9 ⅜	1 ½	2 ⅝	¼	21 ⅜	½	⅜	41
9	2	CEFVP92	9	7 ⅞	11 ½	1 ⅝	9 ⅜	1 ½	2 ⅝	¼	21 ⅜	½	⅜	41
10	1 ½	CEFVP10112	9 ½	8 ⅞	11 ¼	1 ¾	9 ½	1 ¾	2 ⅞	¼	23 ½	½	⅜	49
10	2	CEFVP102	9 ½	8 ⅞	11 ½	1 ¾	9 ½	1 ¾	2 ⅞	¼	23 ½	½	⅜	49
12	2	CEFVP122	10	9 ⅝	11 ½	2	12 ¼	1 ⅝	2 ¾	¼	26 ⅜	⅝	½	53
12	2 7⁄16	CEFVP122716	10	9 ⅝	11 ¾	2	12 ¼	1 ⅝	2 ¾	¼	26 ⅜	⅝	½	60
12	3	CEFVP123	10	9 ⅝	12 ¼	2	12 ¼	1 ⅝	2 ¾	¼	26 ⅜	⅝	½	60
14	2 7⁄16	CEFVP142716	11	10 ⅞	12	2	13 ½	1 ⅝	2 ⅞	5⁄16	28 ⅜	⅝	½	89
14	3	CEFVP143	11	10 ⅞	12 ⅜	2	13 ½	1 ⅝	2 ⅞	5⁄16	28 ⅜	⅝	½	89
16	3	CEFVP163	11 ½	12	12 ⅜	2 ½	14 ⅞	2	3 ¼	5⁄16	32 ½	⅝	⅝	114
18	3	CEFVP183	12 ⅛	13 ⅜	12 ½	2 ½	16	2	3 ¼	⅜	36 ½	⅝	⅝	174
18	3 7⁄16	CEFVP183716	12 ⅛	13 ⅜	13	2 ½	16	2	3 ¼	⅜	36 ½	⅝	⅝	181
20	3	CEFVP203	13 ½	15	12 ½	2 ½	19 ¼	2 ¼	3 ¾	⅜	39 ½	¾	⅝	199
20	3 7⁄16	CEFVP203716	13 ½	15	13	2 ½	19 ¼	2 ¼	3 ¾	⅜	39 ½	¾	⅝	200
24	3 7⁄16	CEFVP243716	16 ½	18 ⅛	13	2 ½	20	2 ½	4 ⅛	⅜	45 ½	¾	⅝	260
24	3 15⁄16	CEFVP2431516	16 ½	18 ⅛	14	2 ½	20	2 ½	4 ⅛	⅜	45 ½	¾	⅝	273
30	3 7⁄16	CEFVP303716	19 ¾	21 ½	13	2 ½	24	2 ¾	4 ⅜	⅜	54 ¾	¾	⅝	302
30	3 15⁄16	CEFVP3031516	19 ¾	21 ½	14	2 ½	24	2 ¾	4 ⅜	⅜	54 ¾	¾	⅝	302
36	3 15⁄16	CEFVP3631516	24	26	14 ¼	2 ½	27, 35	2 ¾	4 ⅜	½	65 ¾	1(4)	⅝	460
36	4 7⁄16	CEFVP364716	24	26	14 ½	2 ½	27, 35	2 ¾	4 ⅜	½	65 ¾	1(4)	⅝	460

* "D" Dimension shown is for packing gland seal clearance. For clearance of other seals, Conveyor Engineering & Manufacturing.
See p.87 for end flange bolt pattern. Contact Conveyor Eng. & Mfg. for larger sizes. Contact Conveyor Eng. & Mfg. for larger sizes.

PHONE 319.364.5600 | 800.452.4027 **FAX** 319.364.6449

END PLATES

TUBE TROUGH STYLE

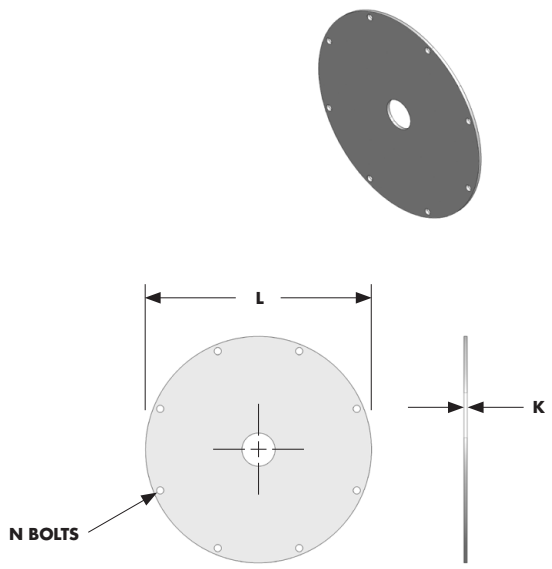

"CET" W/O FOOT

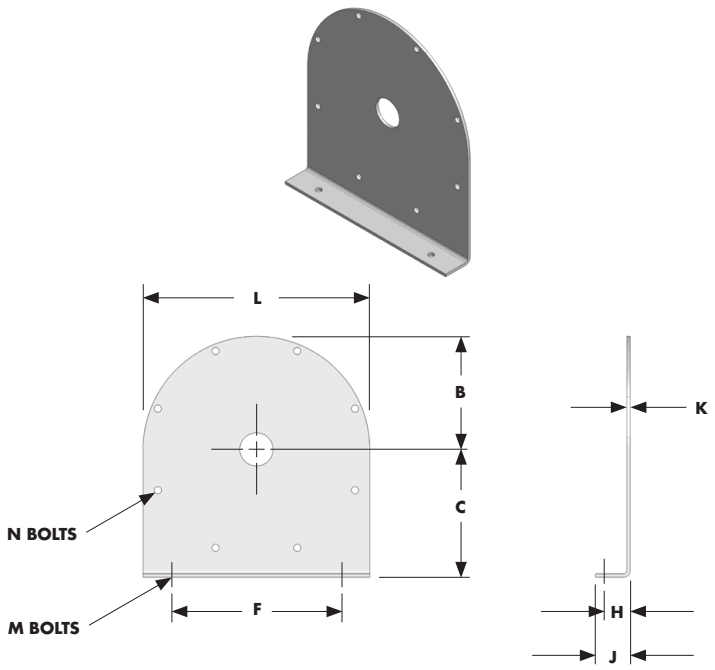

"CEFT" W/ FOOT

SIZE	SHAFT DIA	PART # (W/O FOOT)	PART # (W/ FOOT)	B	C	F	H	J	K	L	M BOLT	N BOLT	"CET" WT	"CEFT" WT
6	1 ½	CET6112	CEFT6112	4 ⅞	5 ⅝	8 ⅛	1	1 ¾	3/16	9 ¾	⅜	⅜	4	6
9	1 ½	CET9112	CEFT9112	6 ⅞	7 ⅞	9 ⅜	1 ½	2 ⅝	¼	13 ¾	½	⅜	11	15
9	2	CET92	CEFT92	6 ⅞	7 ⅞	9 ⅜	1 ½	2 ⅝	¼	13 ¾	½	⅜	11	15
10	1 ½	CET10112	CEFT10112	7 ⅜	8 ⅞	9 ½	1 ¾	2 ⅞	¼	14 ¾	½	⅜	12	18
10	2	CET102	CEFT102	7 ⅜	8 ⅞	9 ½	1 ¾	2 ⅞	¼	14 ¾	½	⅜	12	18
12	2	CET122	CEFT122	8 ⅝	9 ⅝	12 ¼	1 ⅝	2 ¾	¼	17 ¼	⅝	½	17	23
12	2 7/16	CET122716	CEFT122716	8 ⅝	9 ⅝	12 ¼	1 ⅝	2 ¾	¼	17 ¼	⅝	½	17	23
12	3	CET123	CEFT123	8 ⅝	9 ⅝	12 ¼	1 ⅝	2 ¾	¼	17 ¼	⅝	½	17	23
14	2 7/16	CET142716	CEFT142716	9 ⅝	10 ⅞	13 ½	1 ⅝	2 ⅞	5/16	19 ¼	⅝	½	26	36
14	3	CET143	CEFT143	9 ⅝	10 ⅞	13 ½	1 ⅝	2 ⅞	5/16	19 ¼	⅝	½	26	36
16	3	CET163	CEFT163	10 ⅝	12	14 ⅞	2	3 ¼	5/16	21 ¼	⅝	⅝	31	44
18	3	CET183	CEFT183	12 ⅛	13 ⅜	16	2	3 ¼	⅜	24 ¼	⅝	⅝	49	66
18	3 7/16	CET183716	CEFT183716	12 ⅛	13 ⅜	16	2	3 ¼	⅜	24 ¼	⅝	⅝	49	66
20	3	CET203	CEFT203	13 ⅛	15	19 ¼	2 ¼	3 ¾	⅜	26 ¼	¾	⅝	58	80
20	3 7/16	CET203716	CEFT203716	13 ⅛	15	19 ¼	2 ¼	3 ¾	⅜	26 ¼	¾	⅝	58	80
24	3 7/16	CET243716	CEFT243716	15 ⅛	18 ⅛	20	2 ½	4 ⅛	⅜	30 ¼	¾	⅝	77	109
24	3 15/16	CET2431516	CEFT2431516	15 ⅛	18 ⅛	20	2 ½	4 ⅛	⅜	30 ¼	¾	⅝	77	109

Contact Conveyor Eng. & Mfg. for larger sizes.

COVERS

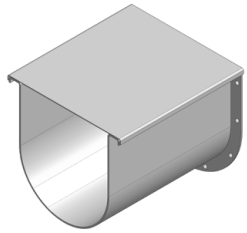	**FLANGED COVER:** Most common. More rigid than the flat cover and seals better. Stays in place better giving an extra margin of safety. Flanged Covers provide a limited degree of weather and dust proofing which can be enhanced with gasketing. Also available as semi-flanged.
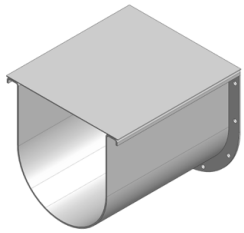	**FLAT OR SEMI-FLANGED COVER:** Works well with spring clamps but supports less weight than other types and doesn't seal as well. Can be a safety hazard unless bolted in place properly so they are only recommended under special circumstances.
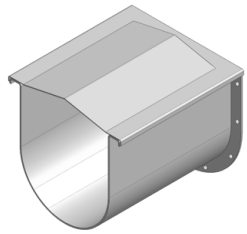	**HIP-ROOF (RIDGED) COVER:** Recommended for outdoor applications to help shed rain or snow. Both Sides of the cover are flanged to aid in weather-proofing. Can be gasketed for additional protection.
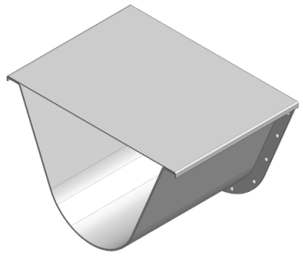	**FLARED TROUGH COVER (FLANGED):** Same as a flanged cover but wider to fit a flared trough.
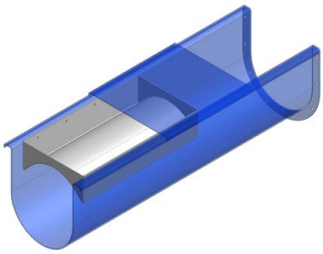	**SHROUD:** For use with standard U-troughs when a tubular trough is needed but can't be used or simply to better control flood feed by preventing product from flowing over top of screw. For use with covers shown above or independently. Food grade applications may call for the shroud to be continuously welded to a cover.
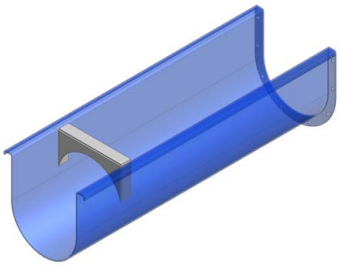	**DAM:** Helps control flood feed by preventing product from flowing over top of screw similar to shroud. Works best with granular materials. Doesn't work as well as shroud with materials that tend to clump together.

PHONE 319.364.5600 | 800.452.4027 **FAX** 319.364.6449

COVERS

FLAT, FLANGED AND SEMI-FLANGED
(U-trough version)

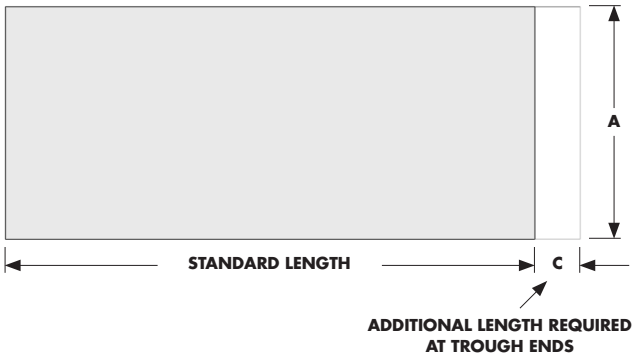

Warning: Flat covers can be a safety hazard unless properly bolted in place.

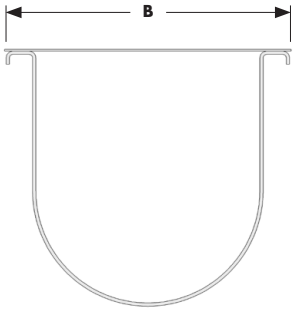

FLAT

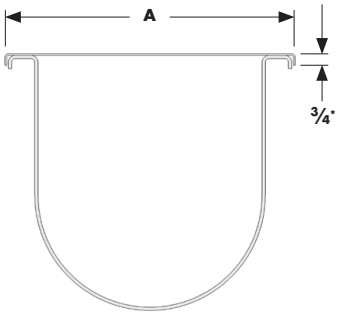

FLANGED

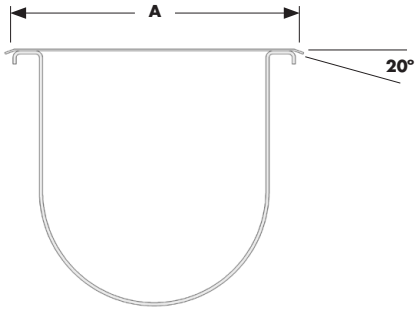

SEMI-FLANGED

SCREW DIA	COVER THICKNESS	STD FLAT PART #	WEIGHT STD LENGTH	STD FLANGE PART #	WEIGHT STD LENGTH	SEMI-FLANGED PART #	WEIGHT STD LENGTH	A*	B	C	STD LENGTH
6	14 ga	CTC614	26	CTC614-F	31	CTC614-S	31	10 ¼	9 ⅞	1 ½	10'-0
6	12 ga	CTC612	36	CTC612-F	43	CTC612-S	43	10 ¼	9 ⅞	1 ½	10'-0
9	14 ga	CTC914	35	CTC914-F	40	CTC914-S	40	14	13 ½	1 ⅝	10'-0
9	12 ga	CTC912	49	CTC912-F	56	CTC912-S	56	14	13 ½	1 ⅝	10'-0
10	14 ga	CTC1014	38	CTC1014-F	43	CTC1014-S	43	15	14 ½	1 ¾	10'-0
10	12 ga	CTC1012	53	CTC1012-F	60	CTC1012-S	60	15	14 ½	1 ¾	10'-0
12	14 ga	CTC1214	55	CTC1214-F	61	CTC1214-S	61	17 ¾	17 ½	2	12'-0
12	12 ga	CTC1212	77	CTC1212-F	85	CTC1212-S	85	17 ¾	17 ½	2	12'-0
12	10 ga	CTC1210	99	CTC1210-F	109	CTC1210-S	109	17 ¾	17 ½	2	12'-0
14	14 ga	CTC1414	62	CTC1414-F	67	CTC1414-S	67	19 ¾	19 ½	2	12'-0
14	12 ga	CTC1412	86	CTC1412-F	94	CTC1412-S	94	19 ¾	19 ½	2	12'-0
14	10 ga	CTC1410	111	CTC1410-F	121	CTC1410-S	121	19 ¾	19 ½	2	12'-0
16	12 ga	CTC1612	86	CTC1612-F	103	CTC1612-S	103	21 ¾	21 ½	2 ½	12'-0
16	10 ga	CTC1610	122	CTC1610-F	132	CTC1610-S	132	21 ¾	21 ½	2 ½	12'-0
18	12 ga	CTC1812	108	CTC1812-F	116	CTC1812-S	116	24 ¾	24 ½	2 ½	12'-0
18	10 ga	CTC1810	139	CTC1810-F	149	CTC1810-S	149	24 ¾	24 ½	2 ½	12'-0
20	12 ga	CTC2012	117	CTC2012-F	125	CTC2012-S	125	26 ¾	26 ½	2 ½	12'-0
20	10 ga	CTC2010	150	CTC2010-F	161	CTC2010-S	161	26 ¾	26 ½	2 ½	12'-0
24	12 ga	CTC2412	135	CTC2412-F	142	CTC2412-S	142	30 ¾	30 ½	2 ½	12'-0
24	10 ga	CTC2410	173	CTC2410-F	183	CTC2410-S	183	30 ¾	30 ½	2 ½	12'-0
30	10 ga	CTC3010	207	CTC3010-F	215	CTC3010-S	215	37 ¾	37 ½	2 ½	12'-0
30	3/16	CTC307	288	CTC307-F	300	CTC307-S	300	37 ¾	37 ½	2 ½	12'-0
36	10 ga	CTC3610	241	CTC3610-F	257	CTC3610-S	257	44	43 ¾	2 ½	12'-0
36	3/16	CTC367	336	CTC367-F	360	CTC367-S	360	44	43 ¾	2 ½	12'-0

* Inside Dimension
Contact Conveyor Eng. & Mfg. for larger sizes.

COVERS

HIP-ROOF (RIDGED)
(U-trough version)

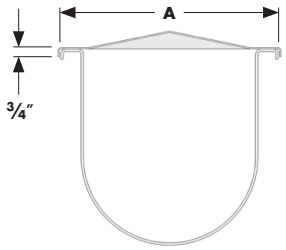

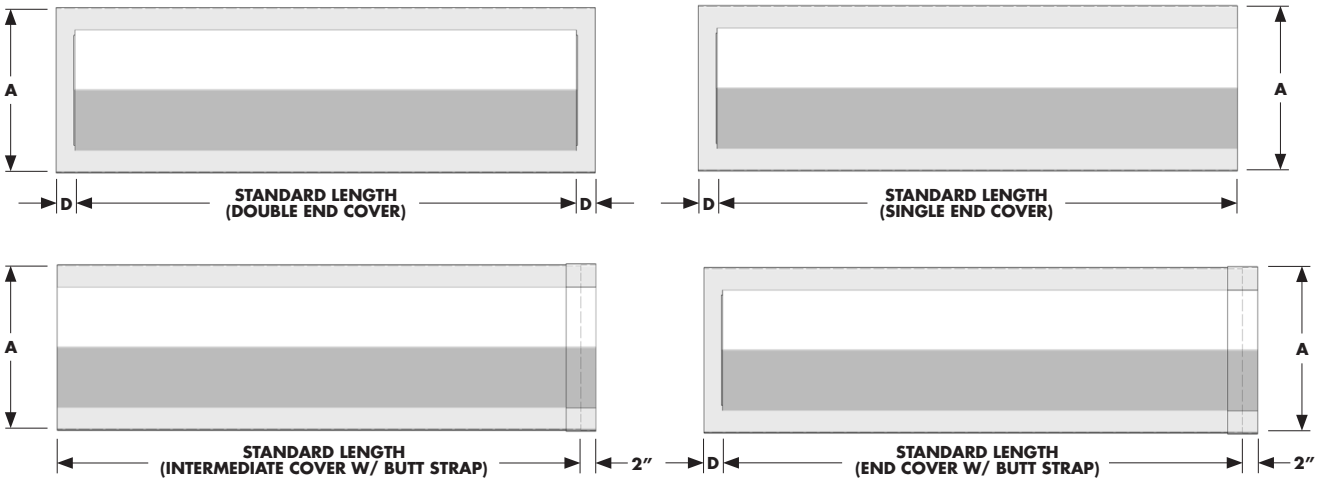

SCREW DIA	COVER THICKNESS	STD FLANGE DESCRIPTION	WEIGHT STD LENGTH	A*	D	STD LENGTH
6	14 ga	CTC614-R	33	10 ¼	1 ½	10'-0
6	12 ga	CTC612-R	46	10 ¼	1 ½	10'-0
9	14 ga	CTC914-R	42	14	1 ⅝	10'-0
9	12 ga	CTC912-R	59	14	1 ⅝	10'-0
10	14 ga	CTC1014-R	45	15	1 ¾	10'-0
10	12 ga	CTC1012-R	63	15	1 ¾	10'-0
12	14 ga	CTC1214-R	63	17 ¾	2	12'-0
12	12 ga	CTC1212-R	88	17 ¾	2	12'-0
14	14 ga	CTC1414-R	69	19 ¾	2	12'-0
14	12 ga	CTC1412-R	96	19 ¾	2	12'-0
16	14 ga	CTC1614-R	75	21 ¾	2 ½	12'-0
16	12 ga	CTC1612-R	105	21 ¾	2 ½	12'-0
18	12 ga	CTC1812-R	118	24 ¾	2 ½	12'-0
18	10 ga	CTC1810-R	151	24 ¾	2 ½	12'-0
20	12 ga	CTC2012-R	126	26 ¾	2 ½	12'-0
20	10 ga	CTC2010-R	163	26 ¾	2 ½	12'-0
24	12 ga	CTC2412-R	144	30 ¾	2 ½	12'-0
24	10 ga	CTC2410-R	185	30 ¾	2 ½	12'-0
30	10 ga	CTC3010-R	216	37 ¾	2 ½	12'-0
30	3/16	CTC307-R	302	37 ¾	2 ½	12'-0
36	10 ga	CTC3610-R	247	44	2 ½	12'-0
36	3/16	CTC367-R	344	44	2 ½	12'-0

* Inside Dimension
Note: Peak clearance is 3" on 36" covers; 2" on all others.
Contact Conveyor Eng. & Mfg. for larger sizes.

PHONE 319.364.5600 | 800.452.4027 **FAX** 319.364.6449

COVERS

FLANGED AND FLAT
(flared trough version)

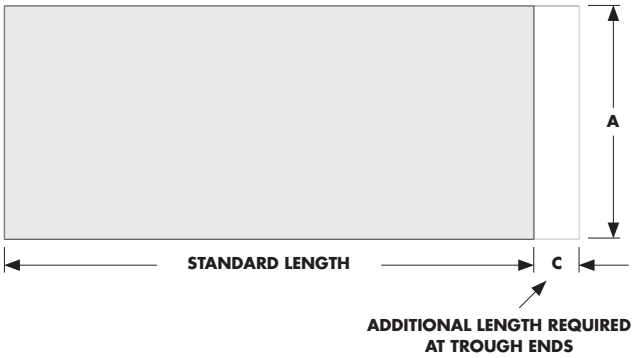

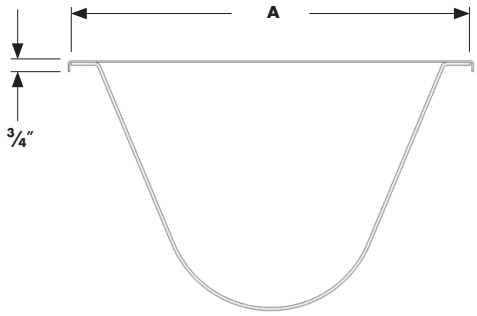

FLANGED

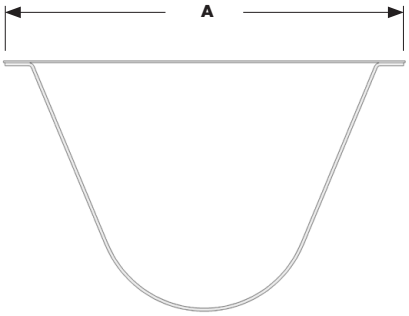

FLAT

Warning: Flat covers can be a safety hazard unless properly bolted in place.

SCREW DIA	COVER THICKNESS	FLARED FLAT DESCRIPTION	WEIGHT STD LENGTH	FLARED FLANGE DESCRIPTION	WEIGHT STD LENGTH	A*	C	STD LENGTH
6	14 ga	CTC614-V	44	CTC614-VF	49	16 ⅞	1 ½	10'-0
6	12 ga	CTC612-V	62	CTC612-VF	69	16 ⅞	1 ½	10'-0
9	14 ga	CTC914-V	56	CTC914-VF	61	21 ½	1 ⅝	10'-0
9	12 ga	CTC912-V	79	CTC912-VF	86	21 ½	1 ⅝	10'-0
10	14 ga	CTC1014-V	61	CTC1014-VF	67	23 ¾	1 ¾	10'-0
10	12 ga	CTC1012-V	86	CTC1012-VF	93	23 ⅝	1 ¾	10'-0
12	14 ga	CTC1214-V	84	CTC1214-VF	90	26 ⅝	2	12'-0
12	12 ga	CTC1212-V	117	CTC1212-VF	126	26 ⅝	2	12'-0
12	10 ga	CTC1210-V	150	CTC1210-VF	162	26 ⅝	2	12'-0
14	14 ga	CTC1414-V	90	CTC1414-VF	96	28 ⅝	2	12'-0
14	12 ga	CTC1412-V	126	CTC1412-VF	135	28 ⅝	2	12'-0
14	10 ga	CTC1410-V	162	CTC1410-VF	173	28 ⅝	2	12'-0
16	12 ga	CTC1612-V	143	CTC1612-VF	152	32 ¾	2 ½	12'-0
16	10 ga	CTC1610-V	184	CTC1610-VF	196	32 ¾	2 ½	12'-0
18	12 ga	CTC1812-V	161	CTC1812-VF	170	36 ¾	2 ½	12'-0
18	10 ga	CTC1810-V	207	CTC1810-VF	219	36 ¾	2 ½	12'-0
20	12 ga	CTC2012-V	174	CTC2012-VF	183	39 ¾	2 ½	12'-0
20	10 ga	CTC2010-V	224	CTC2010-VF	235	39 ¾	2 ½	12'-0
24	12 ga	CTC2412-V	201	CTC2412-VF	210	45 ¾	2 ½	12'-0
24	10 ga	CTC2410-V	258	CTC2410-VF	269	45 ¾	2 ½	12'-0

* Inside Dimension for Flanged version
Contact Conveyor Eng. & Mfg. for larger sizes.

SHROUDS

SHROUDED TROUGH COVER

DAM

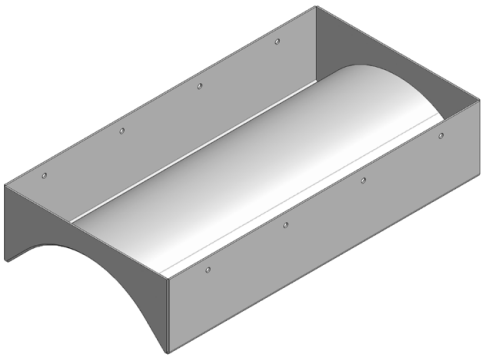

BOLT-IN SHROUD

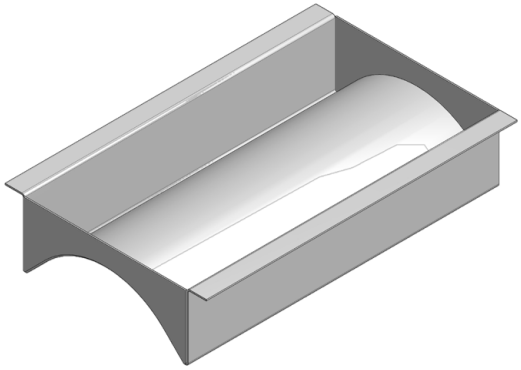

FLANGED SHROUD

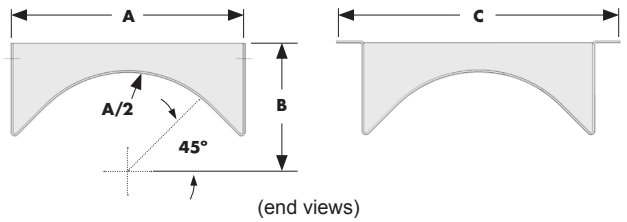

(end views)

(side views)

SCREW DIA	THICK-NESS	DAM PART #	DAM WT	BOLT-IN PART #	BOLT-IN WT	FLANGED PART #	FLANGED WT	A	B	C	D	E*	F	G	H	J	K	L	M	N
6	12 ga.	-	-	CTS612-B	6	CTS612-F	7	7	4 ½	9 ½	¾	12	3	1	6	⅜	-	-	-	-
6	10 ga.	CTD610	1	CTS610-B	7	CTS610-F	8	7	4 ½	9 ½	¾	12	3	1	6	⅜	2	1	1 5⁄16	1
6	3⁄16	CTD67	2	-	-	-	-	7	4 ½	-	¾	-	-	-	-	⅜	2	1	1 5⁄16	1
9	12 ga.	-	-	CTS912-B	11	CTS912-F	13	10	6 ⅛	13	⅞	18	3	2	6	⅜	-	-	-	-
9	10 ga.	CTD910	2	CTS910-B	14	CTS910-F	16	10	6 ⅛	13	⅞	18	3	2	6	⅜	2	1	2	1
9	3⁄16	CTD97	3	-	-	-	-	10	6 ⅛	-	⅞	-	-	-	-	⅜	2	1	2	1
10	12 ga.	-	-	CTS1012-B	13	CTS1012-F	15	11	6 ⅜	14	⅞	20	2 ½	3	5	⅜	-	-	-	-
10	10 ga.	CTD1010	2	CTS1010-B	16	CTS1010-F	18	11	6 ⅜	14	⅞	20	2 ½	3	5	⅜	2	1	2	1
10	3⁄16	CTD107	3	-	-	-	-	11	6 ⅜	-	⅞	-	-	-	-	⅜	2	1	2	1
12	12 ga.	-	-	CTS1212-B	20	CTS1212-F	22	13	7 ¾	17	1 ⅛	24	3	3	6	⅜	-	-	-	-
12	10 ga.	CTD1210	3	CTS1210-B	25	CTS1210-F	28	13	7 ¾	17	1 ⅛	24	3	3	6	⅜	2	1 ¼	2	1
12	3⁄16	CTD127	4	-	-	-	-	13	7 ¾	-	1 ⅛	-	-	-	-	⅜	2	1 ¼	2	1
14	12 ga.	-	-	CTS1412-B	26	CTS1412-F	30	15	9 ¼	19	1 ⅛	28	3 ½	3	7	⅜	-	-	-	-
14	10 ga.	CTD1410	4	CTS1410-B	36	CTS1410-F	39	15	9 ¼	19	1 ⅛	28	3 ½	3	7	⅜	2	1 ½	2 ½	1
14	3⁄16	CTD147	5	-	-	-	-	15	9 ¼	-	1 ⅛	-	-	-	-	⅜	2	1 ½	2 ½	1
16	10 ga.	CTD1610	4	CTS1610-B	47	CTS1610-F	50	17	10 ⅝	21	1 ⅛	32	4	3	8	⅜	2	1 ¼	4 ½	⅞
16	3⁄16	CTD167	6	CTS167-B	61	CTS167-F	68	17	10 ⅝	21	1 ⅛	32	4	3	8	⅜	2	1 ¼	4 ½	⅞
16	¼	CTD163	9	-	-	-	-	17	10 ⅝	-	1 ⅛	-	-	-	-	⅜	2	1 ¼	4 ½	⅞
18	10 ga.	CTD1810	9	CTS1810-B	59	CTS1810-F	64	19	12 ⅛	24	1 ⅜	36	4 ½	3	9	⅜	3	1 ½	4 ¾	1 ¼
18	3⁄16	CTD187	6	CTS187-B	77	CTS187-F	87	19	12 ⅛	24	1 ⅜	36	4 ½	3	9	⅜	3	1 ½	4 ¾	1 ¼
18	¼	CTD183	12	-	-	-	-	19	12 ⅛	-	1 ⅜	-	-	-	-	⅜	3	1 ½	4 ¾	1 ¼
20	10 ga.	CTD2010	8	CTS2010-B	74	CTS2010-F	80	21	13 ½	26	1 ⅜	40	4	4	8	⅜	3	2	5	1 ¼
20	3⁄16	CTD207	10	CTS207-B	107	CTS207-F	107	21	13 ½	26	1 ⅜	40	4	4	8	⅜	3	2	5	1 ¼
20	¼	CTD203	4	-	-	-	-	21	13 ½	-	1 ⅜	-	-	-	-	⅜	3	2	5	1 ¼
24	10 ga.	CTD2410	10	CTS2410-B	109	CTS2410-F	115	25	16 ½	30	1 ⅜	48	4	5	8	⅜	3	1 ½	6 ½	1 ¼
24	3⁄16	CTD247	15	CTS247-B	144	CTS247-F	157	25	16 ½	30	1 ⅜	48	4	5	8	⅜	3	1 ½	6 ½	1 ¼
24	¼	CTD243	19	-	-	-	-	25	16 ½	-	1 ⅜	-	-	-	-	⅜	3	1 ½	6 ½	1 ¼
30	10 ga.	CTD3010	14	CTS3010-B	166	CTS3010-F	173	31	19 ¾	37	1 ⅜	60	5	5	10	½	3	1 ½	7	1 ¼
30	3⁄16	CTD307	19	CTS307-B	221	CTS307-F	241	31	19 ¾	37	1 ⅜	60	5	5	10	½	3	1 ½	7	1 ¼
30	¼	CTD303	25	-	-	-	-	31	19 ¾	-	1 ⅜	-	-	-	-	½	3	1 ½	7	1 ¼
36	10 ga.	CTD3610	19	CTS3610-B	230	CTS3610-F	248	37	24	43	1 ⅜	72	4 ½	6	10 ½	½	3	1 ¾	12 ½	1 ¼
36	3⁄16	CTD367	27	CTS367-B	321	CTS367-F	345	37	24	43	1 ⅜	72	4 ½	6	10 ½	½	3	1 ¾	12 ½	1 ¼
36	¼	CTD363	35	CTS363-B	416	CTS363-F	449	37	24	43	1 ⅜	72	4 ½	6	10 ½	½	3	1 ¾	12 ½	1 ¼

* Standard lengths shown. Other lengths available to suit application.

PHONE 319.364.5600 | 800.452.4027 **FAX** 319.364.6449

COVER CLAMPS

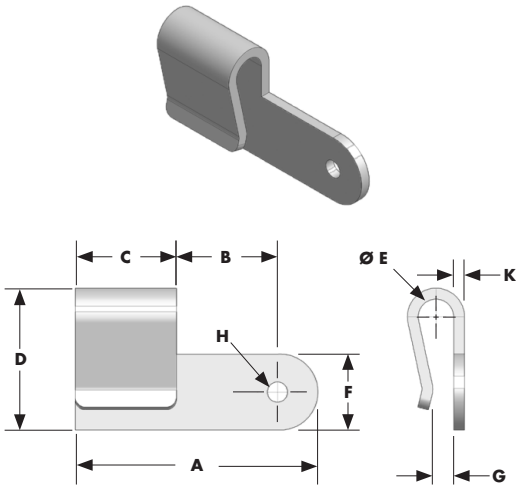

Spring Clamps used for attaching flat or semi-flanged covers to conveyor troughs. The clamps are riveted to the trough and will pivot to permit removal of cover.

Clamp	A	B	C	D	E	F	G	H	K
CCA-S1	3	1 ¼	1 ¼	1 ¾	7⁄16	15⁄16	¼	¼	10 Ga.

Unless otherwise specified, cover clamps are installed at 24” intervals.

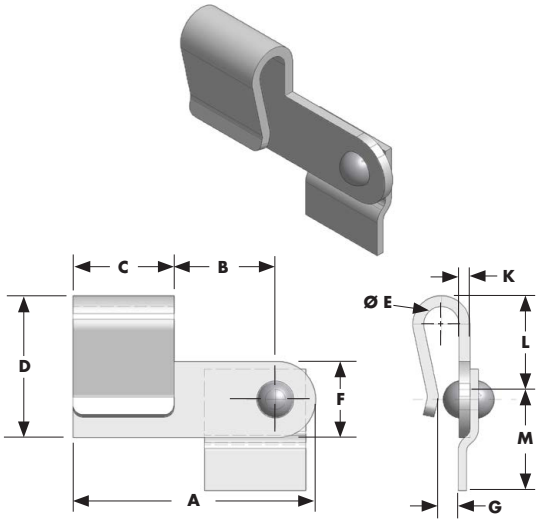

Spring Clamps with Brackets are attached to the top side of semi flanged covers. Bracket is welded to the cover.

Clamp	A	B	C	D	E	F	G	K	L	M
CCA-SB	3	1 ¼	1 ¼	1 ¾	7⁄16	⅞	3⁄16	10 Ga.	1 3⁄16	1 ¼

Unless otherwise specified, clamps are installed at 24” intervals.

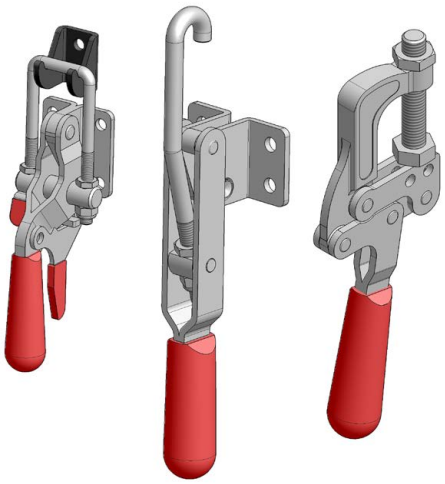

Heavy-Duty Toggle Clamps are sometimes used for drop bottom screw conveyor troughs. Another popular application is for trough covers and panels that require easy access and tight seals. These clamps are readily adjustable to the thickness of the material. Other types of toggle clamps are available.

* Contact Conveyor Eng. & Mfg. for types and dimensions.

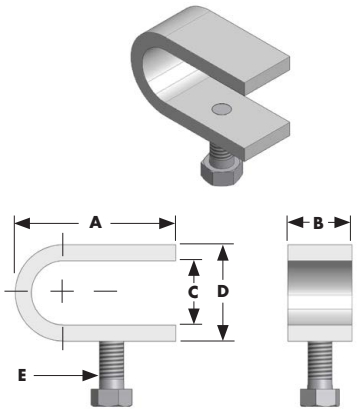

Screw Clamps are designed especially for attaching flanged cover to conveyor troughs, but can also be used for attaching flat or semi flanged covers. Available in carbon steel or stainless (Type 304).

Clamp	A	B	C	D	E	WT
CCA-C2	2 ½	1	1	1 ½	⅜	.48

* Also available with Thumb Screw.
Unless otherwise specified, clamps are installed at 24” intervals.

HANGERS

STYLE 226 - Mounts flush with top of trough to provide level base for covers resulting in better seal. Bolts through trough sides which allows for some vertical and horizontal adjustment.

QUICK-CHANGE 226
Allows for easy bearing replacement due to its separate body and T-bars along with minimal obstruction of material flow.

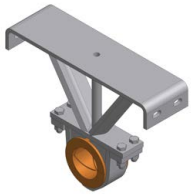

HEAVY-DUTY 226
Designed for the heaviest of applications. Cast stainless bottom cap for long life and quick bearing changes.

As with our new hanger below, the HD hanger is available with a bearing wear indicator option which provides early warning to bearing failure. (see p.66)

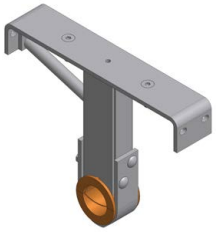

STRONG-ARM QUICK-SWITCH™ 226 NEW
Has a very low profile in the product flow zone which is important with stainless steel hangers because they don't handle fatigue stresses as well as carbon steel hangers. The Strong-Arm™ hanger drastically reduces fatigue resulting from repeated product surges that push against the structural elements of other hangers. (see p.67 for FEA analysis stress profile). All things considered, this may be the longest lasting hanger in the industry...and the easiest to service. A few turns of the top bolts lowers the screws to the trough bottom allowing the cast bottom cap to rotate out and the bearing to be replaced in just a few minutes.

MODIFIED QUICK-CHANGE 226
Quick-Change hanger made to fit tube or flared trough.

STYLE 220 - Mounts on top of trough flanges which offers some installation advantages but covers are more difficult to seal. Allows for horizontal adjustment but not vertical.

QUICK-CHANGE 220
Allows for easy bearing replacement due to its separate body and T-bars along with minimal obstruction of material flow.

STYLE 216 & 230 - Made with a wide, rigid frame primarily to convey cement or other heavy, abrasive materials. Typically used with non-lubricated, hard Iron bearings. Requires CB style bearing and hardened shaft.

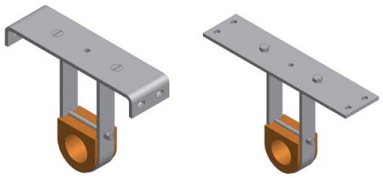

WIGID™ 216/230
Available in both flush mount (style 216) or top mount (style 230).

PHONE 319.364.5600 | 800.452.4027 **FAX** 319.364.6449

HANGERS

QUICK-CHANGE 226

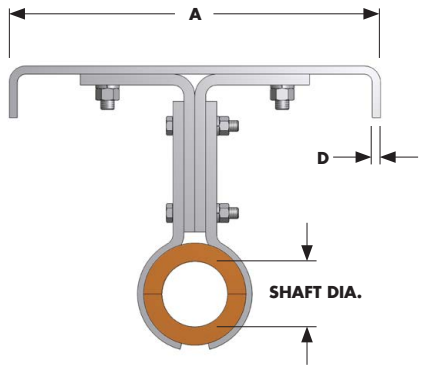

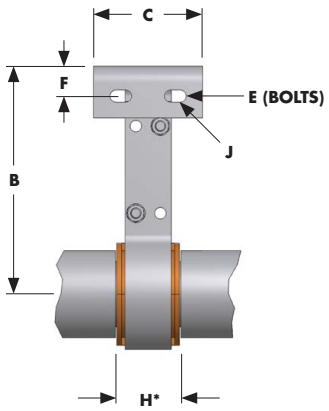

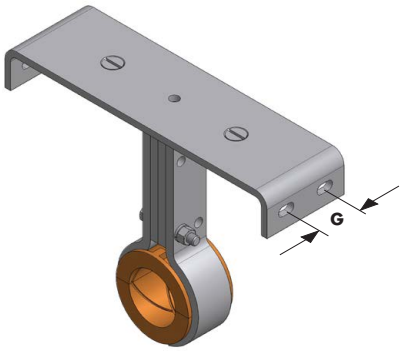

SIZE	SHAFT DIA	PART #	A	B	C	D	BOLTS E	F	G	H*	SLOT J	WEIGHT
6	1 ½	QCCH6226112	7	4 ½	4	¼	⅜	¾	2 ½	2	7/16 x ⅞	6.3
9	1 ½	QCCH9226112	10	6 ⅛	4	¼	⅜	1	2 ½	2	7/16 x ⅞	8.3
9	2	QCCH92262	10	6 ⅛	4	¼	⅜	1	2 ½	2	7/16 x ⅞	8.5
10	1 ½	QCCH10226112	11	6 ⅜	4	¼	⅜	1	2 ½	2	7/16 x ⅞	8.5
10	2	QCCH102262	11	6 ⅜	4	¼	⅜	1	2 ½	2	7/16 x ⅞	8.5
12	2	QCCH122262	13	7 ¾	5	⅜	½	1 ¼	2 ½	2	9/16 x 1	13.8
12	2 7/16	QCCH122262716	13	7 ¾	5	⅜	½	1 ¼	2 ½	3	9/16 x 1	18.3
12	3	QCCH122263	13	7 ¾	5	⅜	½	1 ¼	2 ½	3	9/16 x 1	18.8
14	2 7/16	QCCH142262716	15	9 ¼	5	⅜	½	1 ⅜	2 ½	3	9/16 x 1	20.0
14	3	QCCH142263	15	9 ¼	5	⅜	½	1 ⅜	2 ½	3	9/16 x 1	20.0
16	3	QCCH162263	17	10 ⅝	5	⅜	½	1 ⅜	2 ½	3	9/16 x 1	26.0
18	3	QCCH182263	19	12 ⅛	5	½	⅝	1 ⅝	3 ½	3	11/16 x 1	35.5
18	3 7/16	QCCH182263716	19	12 ⅛	5	½	⅝	1 ⅝	3 ½	4	11/16 x 1	46.0
20	3	QCCH202263	21	13 ½	5	½	⅝	1 ⅝	3 ½	3	11/16 x 1	37.5
20	3 7/16	QCCH202263716	21	13 ½	5	½	⅝	1 ⅝	3 ½	4	11/16 x 1	54.5
24	3 7/16	QCCH242263716	25	16 ½	5	½	⅝	1 ¾	3 ½	4	11/16 x 1	69.3
24	3 15/16	QCCH2422631516	25	16 ½	5	½	⅝	1 ¾	3 ½	4	11/16 x 1	70.0
30	3 7/16	QCCH302263716	31	19 ¾	6	½	⅝	1 ¾	4	4	11/16 x 1	91.0
30	3 15/16	QCCH3022631516	31	19 ¾	6	½	⅝	1 ¾	4	4	11/16 x 1	91.0
36	3 15/16	QCCH3622631516	37	24	8	⅝	¾	2 ⅛	5	4	13/16 x 1 5/16	162
36	4 7/16	QCCH362264716	37	24	8	⅝	¾	2 ⅛	5	5	13/16 x 1 5/16	183

* 'H' dimension is the space between screws allowed for couplings. The bearing width will always be less than this dimension (see p.70)
Contact Conveyor Eng. & Mfg. for larger sizes.

HANGERS

HEAVY-DUTY 226

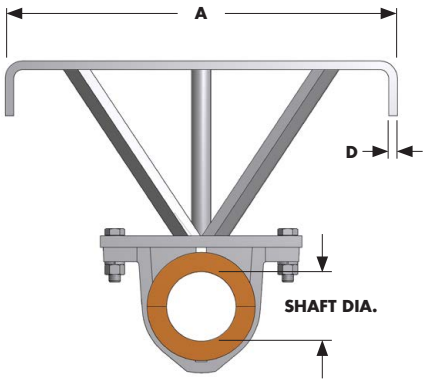

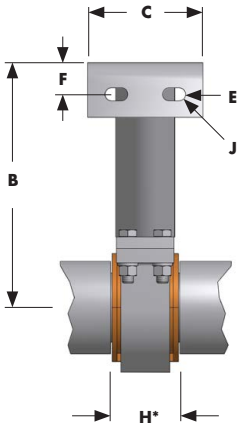

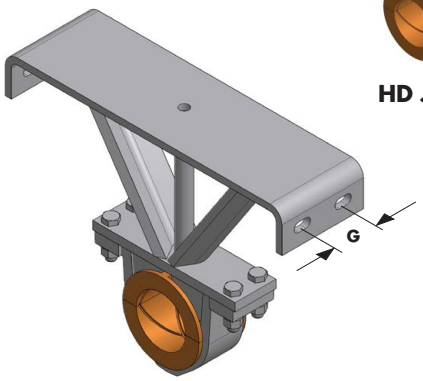

HD (14" AND UP)

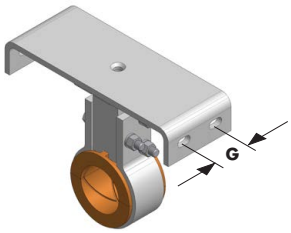

HD JR. (12")

SIZE	SHAFT DIA	PART #	A	B	C	D	BOLTS E	F	G	H*	SLOT J	WEIGHT
12	3	HDJ122263	13	7 3/4	5	3/8	1/2	1 1/4	2 1/4	3	9/16 x 1	27.0
14	3	HDCH142263	15	9 5/32	5	3/8	1/2	1 3/8	2 1/2	3	9/16 x 1	24.3
16	3	HDCH162263	17	10 17/32	5	3/8	1/2	1 3/8	2 1/2	3	9/16 x 1	33.0
18	3	HDCH182263	19	12 1/32	5	1/2	5/8	1 5/8	3 1/2	3	11/16 x 1	35.5
18	3 7/16	HDCH182263716	19	12 1/32	5	1/2	5/8	1 5/8	3 1/2	4	11/16 x 1	49.5
20	3	HDCH202263	21	13 13/32	5	1/2	5/8	1 5/8	3 1/2	3	11/16 x 1	42.0
20	3 7/16	HDCH202263716	21	13 13/32	5	1/2	5/8	1 5/8	3 1/2	4	11/16 x 1	54.5
24	3 7/16	HDCH242263716	25	16 13/32	5	1/2	5/8	1 3/4	3 1/2	4	11/16 x 1	65.0
24	3 15/16	HDCH2422631516	25	16 13/32	5	1/2	5/8	1 3/4	3 1/2	4	11/16 x 1	66.0
30	3 7/16	HDCH302263716	31	19 5/8	6	1/2	5/8	1 3/4	4	4	11/16 x 1	85.0
30	3 15/16	HDCH3022631516	31	19 5/8	6	1/2	5/8	1 3/4	4	4	11/16 x 1	87.0
36	3 15/16	HDCH3622631516	37	23 7/8	8	5/8	3/4	2 1/8	5	4	13/16 x 1 5/16	133
36	4 7/16	HDCH362264716	37	23 7/8	8	5/8	3/4	2 1/8	5	5	13/16 x 1 5/16	160

* 'H' dimension is the space between screws allowed for couplings. The bearing width will always be less than this dimension (see p.70)
Note: Unlike some heavy duty hangers, the HD series uses the common (off-the-shelf) CBX style bearings that are available in many materials. Contact Conveyor Eng. & Mfg. for larger sizes.

WEAR INDICATOR OPTION

Our patent pending "Wear Indicator" option is available in the Heavy-Duty and Strong-Arm Quick-Switch™ hanger series. This special hanger, used in conjunction with the indicator hanger bearing, will trigger a spring loaded flag telling you exactly when your bearing has reached its 80% wear point. No more guessing how much your hanger bearings are worn. No more going the costly but conservative route of changing bearings more often than necessary. No more worrying about the even more expensive possibility of bearing failure with its resulting down time as well as screw and trough replacement costs.

Contact Conveyor Eng. & Mfg. for more information.

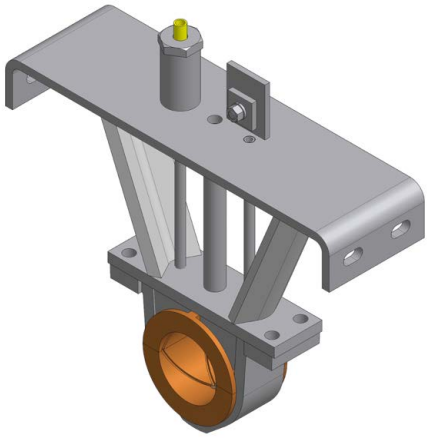

HANGERS

STRONG-ARM QUICK-SWITCH™ 226

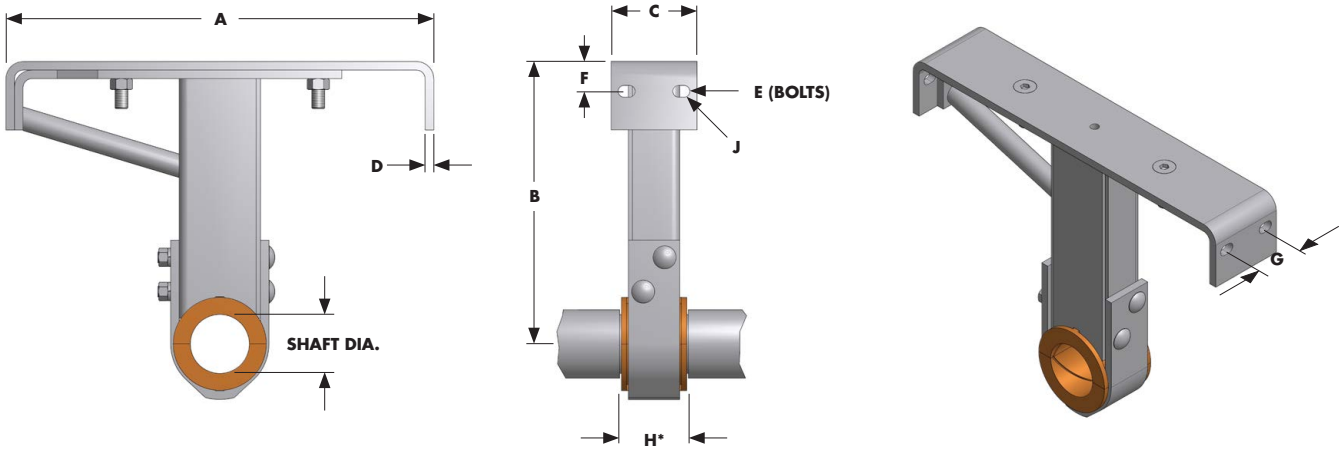

SIZE	SHAFT DIA	PART #	A	B	C	D	BOLTS E	F	G	H*	SLOT J	WEIGHT
12	3	SACH122263	13	7 3/4	5	3/8	1/2	1 1/4	2 1/4	3	9/16 x 1	22.3
14	3	SACH142263	15	9 5/32	5	3/8	1/2	1 3/8	2 1/2	3	9/16 x 1	25.7
16	3	SACH162263	17	10 17/32	5	3/8	1/2	1 3/8	2 1/2	3	9/16 x 1	28.4
18	3	SACH182263	19	12 1/32	5	1/2	5/8	1 5/8	3 1/2	3	11/16 x 1	37.5
18	3 7/16	SACH182263716	19	12 1/32	5	1/2	5/8	1 5/8	3 1/2	4	11/16 x 1	46.6
20	3	SACH202263	21	13 13/32	5	1/2	5/8	1 5/8	3 1/2	3	11/16 x 1	43.1
20	3 7/16	SACH202263716	21	13 13/32	5	1/2	5/8	1 5/8	3 1/2	4	11/16 x 1	50.4
24	3 7/16	SACH242263716	25	16 13/32	5	1/2	5/8	1 3/4	3 1/2	4	11/16 x 1	58.8
24	3 15/16	SACH2422631516	25	16 13/32	5	1/2	5/8	1 3/4	3 1/2	4	11/16 x 1	62.5
30	3 7/16	SACH302263716	31	19 5/8	6	1/2	5/8	1 3/4	4	4	11/16 x 1	82.4
30	3 15/16	SACH3022631516	31	19 5/8	6	1/2	5/8	1 3/4	4	4	11/16 x 1	89.1
36	3 15/16	SACH3622631516	37	23 7/8	8	5/8	3/4	2 1/8	5	4	13/16 x 1 5/16	146.2
36	4 7/16	SACH362264716	37	23 7/8	8	5/8	3/4	2 1/8	5	5		158.0

* 'H' dimension is the space between screws allowed for hanger bearings. The bearing length will always be less than this dimension (see p.70)
Note: Unlike some heavy duty hangers, the Strong-Arm series uses the common (off-the-shelf) CBX style bearings that are available in many materials. Contact Conveyor Eng. & Mfg. for larger sizes.

NEW DESIGNS & FEA ANALYSIS

As with our Strong-Arm Quick-Switch™ hanger, all new designs must first pass a thorough FEA analysis before entering the in-service test phase. We would like to thank our long term customers that have worked with us over the years to test new components in real world, difficult applications.

Most, if not all other screw conveyor manufacturers design components to be constructed with carbon steel. Conveyor Eng. & Mfg. may be the only manufacturer that designs components primarily for stainless steel construction and the important material property differences involved.

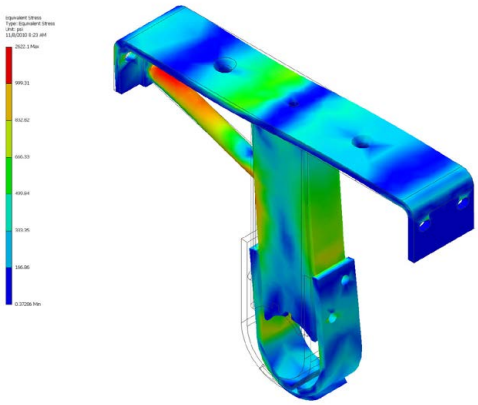

HANGERS

QUICK-CHANGE 220

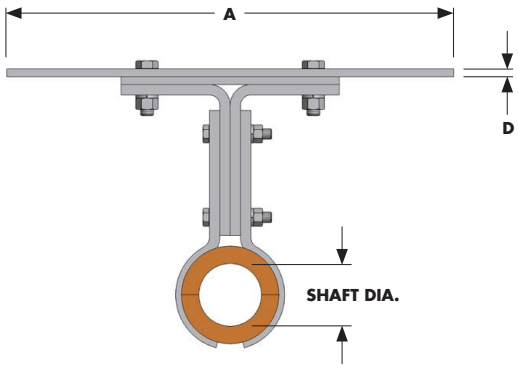

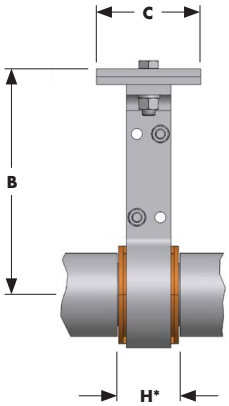

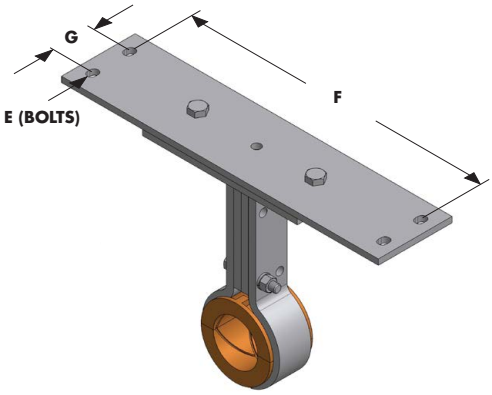

SIZE	SHAFT DIA	PART #	A	B	C	D	BOLTS E	F	G	H	WEIGHT
6	1 ½	QCCH6220112	9 ¾	4 ½	4	¼	⅜	8 ¾	2 ½	2	7
9	1 ½	QCCH9220112	13 ½	6 ⅛	4	¼	⅜	12 ¼	2 ½	2	9
9	2	QCCH92202	13 ½	6 ⅛	4	¼	⅜	12 ¼	2 ½	2	11
10	1 ½	QCCH10220112	14 ½	6 ⅜	4	¼	⅜	13 ¼	2 ½	2	10
10	2	QCCH102202	14 ½	6 ⅜	4	¼	⅜	13 ¼	2 ½	2	12
12	2	QCCH122202	17 ½	7 ¾	5	⅜	½	15 ¾	2 ½	2	16
12	2 7/16	QCCH122202716	17 ½	7 ¾	5	⅜	½	15 ¾	2 ½	3	21
12	3	QCCH122203	17 ½	7 ¾	5	⅜	½	15 ¾	2 ½	3	28
14	2 7/16	QCCH142202716	19 ½	9 ¼	5	⅜	½	17 ¾	2 ½	3	26
14	3	QCCH142203	19 ½	9 ¼	5	⅜	½	17 ¾	2 ½	3	33
16	3	QCCH162203	21 ½	10 ⅝	5	⅜	½	19 ¾	2 ½	3	39
18	3	QCCH182203	24 ½	12 ⅛	5	½	⅝	22 ¼	3 ½	3	41
18	3 7/16	QCCH182203716	24 ½	12 ⅛	5	½	⅝	22 ¼	3 ½	4	49
20	3	QCCH202203	26 ½	13 ½	5	½	⅝	24 ¼	3 ½	3	43
20	3 7/16	QCCH202203716	26 ½	13 ½	5	½	⅝	24 ¼	3 ½	4	51
24	3 7/16	QCCH242203716	30 ½	16 ½	5	½	⅝	28 ¼	3 ½	4	57
24	3 15/16	QCCH2422031516	30 ½	16 ½	5	½	⅝	28 ¼	3 ½	4	65
30	3 7/16	QCCH302203716	37 ½	19 ¾	6	⅝	¾	35	4	4	129
30	3 15/16	QCCH3022031516	37 ½	19 ¾	6	⅝	¾	35	4	4	145
36	3 15/16	QCCH3622031516	43 ½	24	8	⅝	¾	41	4	4	151
36	4 7/16	QCCH362204716	43 ½	24	8	⅝	¾	41	4	5	153

* 'H' dimension is the space between screws allowed for hanger bearings. The bearing length will always be less than this dimension (see p.70)
Contact Conveyor Eng. & Mfg. for larger sizes.

PHONE 319.364.5600 | 800.452.4027 **FAX** 319.364.6449

HANGERS

QUICK-CHANGE-FLARED 226

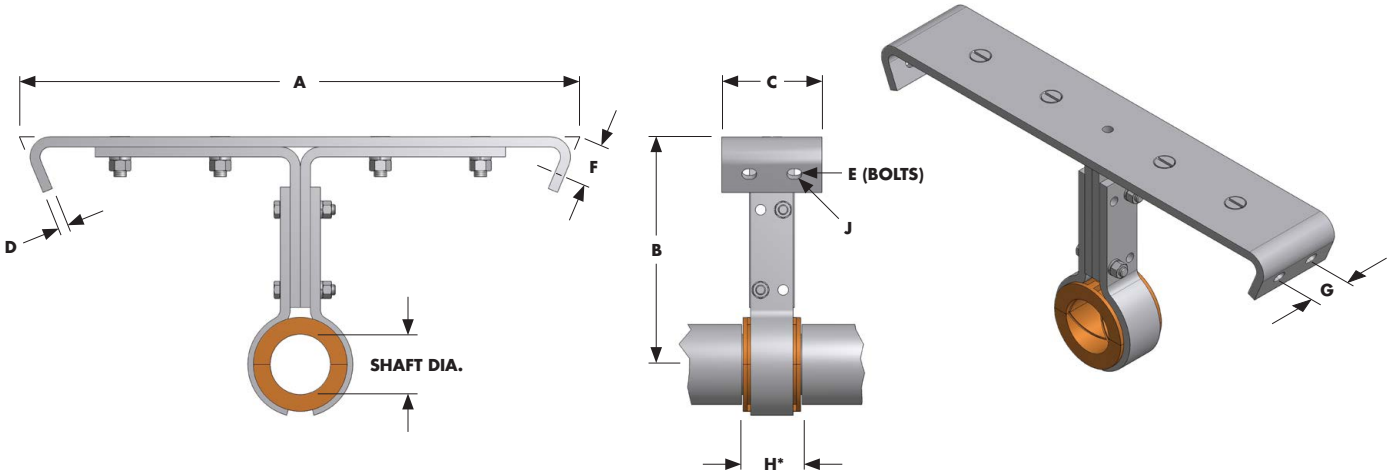

SIZE	SHAFT DIA	PART #	A	B	C	D	E	F	G	H*	J (SLOT)	WEIGHT
6	1 ½	QCCH6226112V	14	7	4	¼	⅜	1 ¼	2 ½	2	7⁄16 x ⅞	11
9	1 ½	QCCH9226112V	18	9	4	¼	⅜	1 ¼	2 ½	2	7⁄16 x ⅞	11
9	2	QCCH92262V	18	9	4	¼	⅜	1 ¼	2 ½	2	7⁄16 x ⅞	12
12	2	QCCH122262V	22	10	5	⅜	½	1 1⁄16	2 ½	2	9⁄16 x 1	13
12	2 7⁄16	QCCH122262716V	22	10	5	⅜	½	1 1⁄16	2 ½	3	9⁄16 x 1	18
12	3	QCCH122263V	22	10	5	⅜	½	1 1⁄16	2 ½	3	9⁄16 x 1	29
14	2 7⁄16	QCCH142262716V	24	11	5	⅜	½	2 ¼	2 ½	3	9⁄16 x 1	35
14	3	QCCH142263V	24	11	5	⅜	½	2 ¼	2 ½	3	9⁄16 x 1	35
16	3	QCCH162263V	28	11 ½	5	⅜	½	2	2 ½	3	9⁄16 x 1	43
18	3	QCCH182263V	31	12 ⅛	5	½	⅝	3	3 ½	3	11⁄16 x 1	63
18	3 7⁄16	QCCH182263716V	31	12 ⅛	5	½	⅝	3	3 ½	4	11⁄16 x 1	63
20	3	QCCH202263V	34	13 ½	5	½	⅝	3	3 ½	3	11⁄16 x 1	49
20	3 7⁄16	QCCH202263716V	34	13 ½	5	½	⅝	3	3 ½	4	11⁄16 x 1	66
24	3 7⁄16	QCCH242263716V	40	16 ½	5	½	⅝	3 ¾	3 ½	4	11⁄16 x 1	83
24	3 15⁄16	QCCH2422631516V	40	16 ½	5	½	⅝	3 ¾	3 ½	4	11⁄16 x 1	83

* 'H' dimension is the space between screws allowed for hanger bearings. The bearing length will always be less than this dimension (see p.70)
Contact Conveyor Eng. & Mfg. for larger sizes.
All hanger styles are available in versions that fit flared troughs.

HANGERS

HANGER BEARINGS

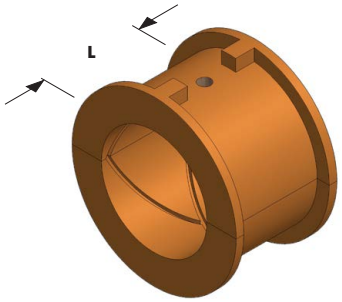

CBX (fits 220 & 226 style hangers)

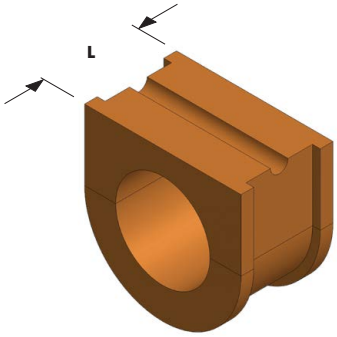

CB (fits 216 & 230 style hangers)

SHAFT DIA	PART NUMBER	PART NUMBER	NOMINAL BORE	"L" LENGTH THROUGH BORE**
1 ½	CBX112-*	CB112-*	1.505	1 15/16
2	CBX2-*	CB2-*	2.007	1 15/16
2 7/16	CBX2716-*	CB2716-*	2.445	2 7/8
3	CBX3-*	CB3-*	3.010	2 7/8
3 7/16	CBX3716-*	CB3716-*	3.448	3 13/16
3 15/16	CBX31516-*	CB31516-*	3.948	3 13/16
4 7/16	CBX4716-*	-	4.448	4 13/16
4 15/16	CBX41516-*	-	4.948	4 13/16

*** Material Types:** BBT: Babbitt, BR: Bronze, BR-G: Bronze w/graphite plugs, CER: Ceramic, ER: Ertalyte, GR: Graphite, HI: Hard Iron, MEL: Melamine, NY: Nylon, PR: Plastic Resin, RY: Ryertex, SYN: Synthane, UHMW: UHMW, UR: Urethane, WD: Wood

** Nominal bore length shown. Some types (specifically ceramic) are often slightly longer. See 'H' dimension on previous pages to determine clearance.

HANGER BEARING SELECTION

BEARING MATERIAL	AVAILABLE STYLES	MAX OPERATING TEMP (F)	FDA APPROVED	LUBE	SUGGESTED USES	COMMENTS
Babbit	CBX, CB	130	No	Self	Grain, Feed, Processing	
Bronze	CBX	200-600**	No	Optional	Grain, Feed, Processing	High quality and load capacity
Brz. w/Graph. plugs	CBX	200-600**	No	Optional	Grain, Feed, Processing	Backup lube protection
Ceramic	CBX	1000	*	Optional	Chemical, Cement	very long life
Ertalyte	CBX	210	Yes	Optional	Food Processing	Recommended for sugar
Graphite	CBX	750	No	Self	Grain, Feed, Processing	
Hard Iron	CBX, CB	500	No	Optional	Chemical, Cement	Requires hardened shafts noisy, slower speeds
Melamine	CBX	250	Yes	Self	Food	Recommended for sugar
Nylon	CBX	160	Available	Optional	Dry Application	
Plastic Resin	CBX	300	Available	Self	Moist Application	Wetted material - light duty
Ryertex	CBX	300	No	Self	Grain, Feed, Processing	
Synthane	CBX	250	*	Optional	*	
UHMW	CBX	170	Yes	Self	Food	Good in wet applications
Urethane	CBX	200	*	Self	Grain, Feed, Fertilizer	
Wood	CBX, CB	160	*	Self	Grain, Feed, Fertilizer	General Purpose

* Contact Conveyor Eng. & Mfg.
** 200° w/petroleum based grease, up to 600° with high temp., synthetic grease

PHONE 319.364.5600 | 800.452.4027 **FAX** 319.364.6449

HANGERS

GREASE TUBES

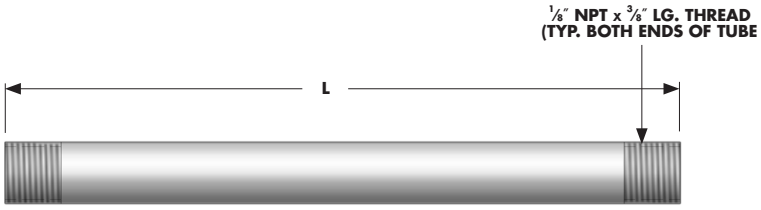

HANGER BEARING GREASE TUBE

SIZE	SHAFT DIA	PART #	L (STD. COVER)	L (HIP-ROOF COVER)
6	1 ½	CHGT6	4 ½	6
9	1 ½, 2	CHGT9	5 ¾	8 ¾
10	1 ½, 2	CHGT10	6	8 ¾
12	2, 2 7/16, 3	CHGT12	7 ¼	9 ½
14	2 7/16, 3	CHGT14	8 ¾	11
16	3	CHGT16	9 ½	12 ½
18	3, 3 7/16	CHGT18	11	13
20	3, 3 7/16	CHGT20	12 ½	15 ¼
24	3 7/16, 3 15/16	CHGT24	15 ¼	18 ½
30	3 7/16, 3 15/16	CHGT30	18 ½	20 ½
36	3 15/16, 4 7/16	CHGT36	22 ½	25 ½

INTERNAL COLLARS / BUSHINGS

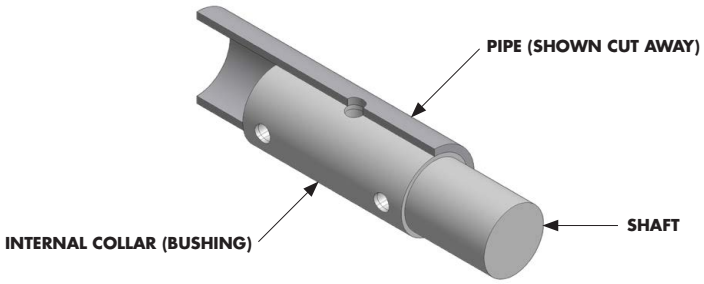

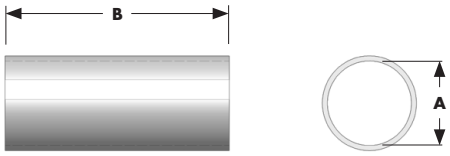

SHAFT DIA	(2 BOLT) PART #*	(3 BOLT) PART #*	A** BORE	B (2 BOLT)	B (3 BOLT)	BOLT HOLE DIAMETER	COUPLING BOLT
1 ½	CICS-112	-	1.510	4 ¾	7 ¾	17/32	½
2	CICS-2	CICS-2-3B	2.010	4 ¾	7 ¾	21/32	⅝
2 7/16	CICS-2716	CICS-2716-3B	2.448	4 ⅞	7 ⅞	21/32	⅝
3	CICS-3	CICS-3-3B	3.014	5	8	25/32	¾
3 7/16	CICS-3716	CICS-3716-3B	3.452	7	11	29/32	⅞
3 15/16	CICS-31516	CICS-31516-3B	3.952	7	11 ½	1 3/16	1 ⅛
4 7/16	CICS-4716	CICS-4716-3B	4.452	N/A	11 ¾	1 5/16	1 ¼

* CICS=Stainless Steel, CIC=Carbon Steel,
** Mean Inside Dimension (tolerance variation of up to +.000/-.002)

SHAFT SEALS

(see Seal Comparison Chart on p.76)

	PLATE SEAL: The most common and economical seal. This type of seal is designed for mounting between the trough end and bearing, but may be used separately on pedestal type trough ends. It is normally furnished with a lip seal, but other types of commercial seal inserts may be used.
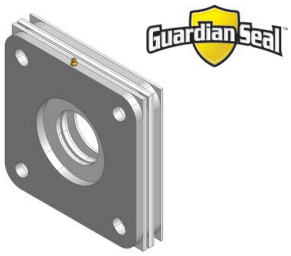	**GUARDIAN™ GREASE PURGE SEAL:** Our best all-around seal. Our GUARDIAN seal is extremely effective against both product and gas interchange, even handling low to moderate pressures and vacuum. The seal will fit wherever air purged seals and waste pack seals fit. It offers very long life, is self adjustable and easily handles shaft run-out and thermal expansion. Just bolt it on, grease it occasionally and it will last for years in most applications. The GUARDIAN seal is also available in high temp (HT) and Split versions.
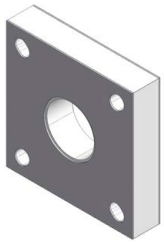	**AIR PURGE SEAL:** Dimensionally similar to Waste Pack Seals. This seal features an advanced sealing method which is comparable to mechanical seals (due to run-out of conveyor shafts and deflection, mechanical seals are not typically used on screw conveyors). Best for dry powder materials. Usually used with an air or inert gas purge.
	WASTE PACKING SEAL: Can be furnished with waste packing or in combination with felt or lip seal. An opening at the top of the housing facilitates waste repacking. The packing material is partially exposed for oiling. This type of seal is normally installed between the trough end and bearing but may be used separately on pedestal type trough ends. Frequently, this seal is used like a plate seal (with a lip seal) with no waste packing to prevent product from reaching the bearing if the lip seal fails.
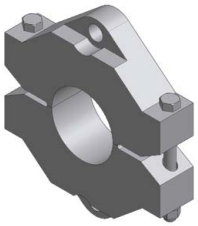	**SPLIT GLAND SEAL:** Compression type seals provide for easy replacement and adjustment of packing pressure on the shaft without removal of the conveyor. Packing pressure may be adjusted by means of the two mounting bolts. This seal is designed for interior or exterior mounting. It has the advantage over flanged gland seals of requiring less space. When used on exterior mount, an outboard bearing must be used.
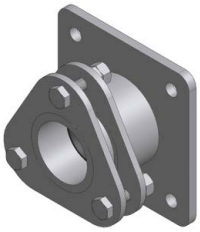	**FLANGED GLAND SEAL:** The most positive type shaft seal and may be used where pressure requirements are desired. Mechanical compression of the packing material is accomplished by means of three compression bolts. Designed for use with outboard bearing ends. Also available in an air purged type.

SHAFT SEALS

PLATE SEAL

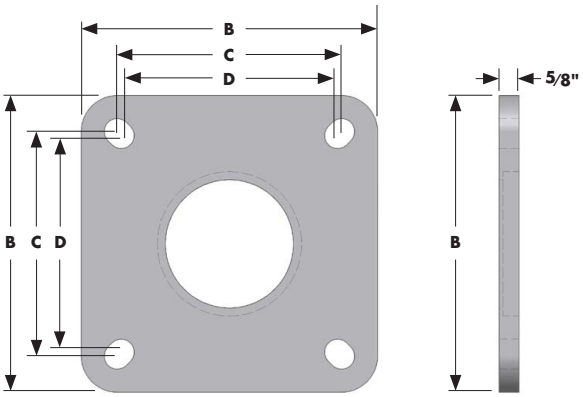

SHAFT DIA	PART #	B	C	D	BOLTS	WEIGHT
1 ½	CSF112	5 ⅜	4 ⅛	4	½	2
2	CSF2	6 ½	5 ⅛	4 ⅜	⅝	3
2 7/16	CSF2716	7 ⅜	5 ⅞	5 ⅜	⅝	4
3	CSF3	7 ¾	6	6	¾	5
3 7/16	CSF3716	9 ¼	7	6 ¾	¾	8
3 15/16	CSF31516	10 ¼	7 ¾	7 ¾	⅞	11

GUARDIAN™ GREASE PURGE SEAL

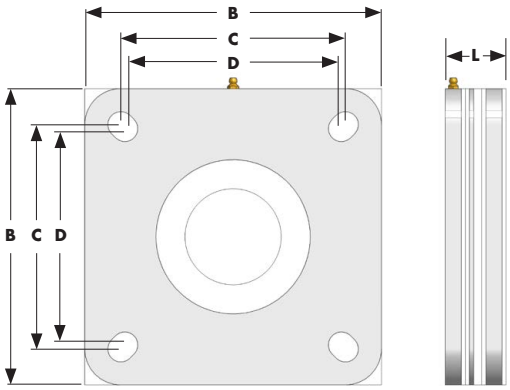

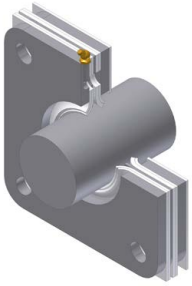

Standard

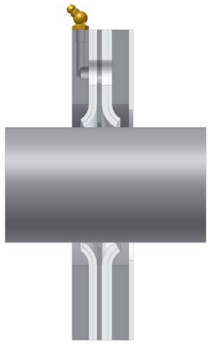

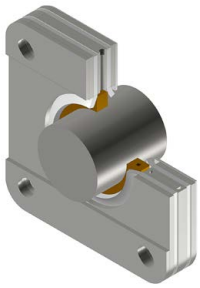

Split Version

SHAFT DIA	STD PART #	HIGH TEMP #	SPLIT #	B	C	D	BOLTS	L	WEIGHT
1 ½	GPS112	GPS112-HT	GPS112-SPLIT	5 ⅜	4 ⅛	4	½	1 ⅞	8.8
2	GPS2	GPS2-HT	GPS2-SPLIT	6 ½	5 ⅛	4 ⅜	⅝	1 ⅞	12.6
2 7/16	GPS2716	GPS2716 -HT	GPS2716 -SPLIT	7 ⅜	5 ⅞	5 ⅜	⅝	1 ⅞	16.9
3	GPS3	GPS3-HT	GPS3-SPLIT	7 ¾	6	6	¾	1 ⅞	17.0
3 7/16	GPS3716	GPS3716-HT	GPS3716-SPLIT	9 ¼	7	6 ¾	¾	1 ⅞	24.7
3 15/16	GPS31516	GPS31516-HT	GPS31516-SPLIT	10 ¼	7 ¾	7 5/16	⅞	2 ⅛	32.2

Dimensions above are for standard and HT (high temp.) Guardian versions. Split version is typically custom made according to application.
See p.76 for comparison of available seals.

SHAFT SEALS

DURA-SHIELD™ AIR PURGE SEAL

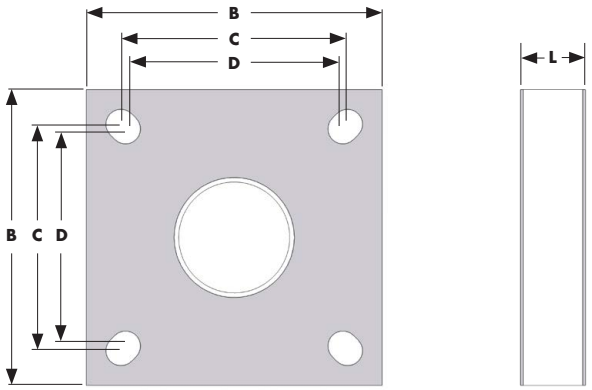

SHAFT DIA	PART #	B	C	D	BOLTS	L (THICKNESS)	WEIGHT
1 ½	CSA112	5 ½	4 ¼	4	½	1 ¾	3
2	CSA2	6 ½	5 ⅛	4 ¼	⅝	1 ¾	4
2 7/16	CSA2716	7 ½	5 ⅞	5 ⅜	⅝	1 ¾	4
3	CSA3	8	6 ⅛	5 ⅞	¾	1 ¾	5
3 7/16	CSA3716	9 ¼	7 ½	6 3/16	¾	1 ¾	7
3 15/16	CSA31516	10 ¼	8 3/16	6 11/16	⅞	1 ¾	8

WASTE PACKING SEAL

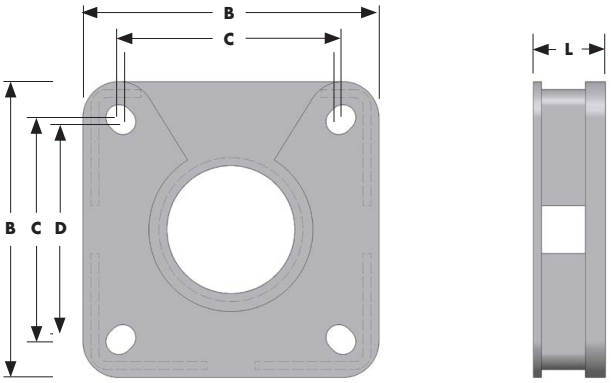

SHAFT DIA	PART #	B	C	D	BOLTS	L (THICKNESS)	WEIGHT
1 ½	CSW112	5 ⅜	4 ⅛	4	½	1 ¾	6
2	CSW2	6 ½	5 ⅛	4 ⅜	⅝	1 ¾	8
2 7/16	CSW2716	7 ⅜	5 ⅞	5 ⅜	⅝	1 ¾	10
3	CSW3	7 ¾	6	6	¾	1 ¾	13
3 7/16	CSW3716	9 ¼	7	6 ¾	¾	2 ¼	16
3 15/16	CSW31516	10 ¼	7 ¾	7 ¾	⅞	2 ¼	19

PHONE 319.364.5600 | 800.452.4027 **FAX** 319.364.6449

SHAFT SEALS

SPLIT GLAND SEAL

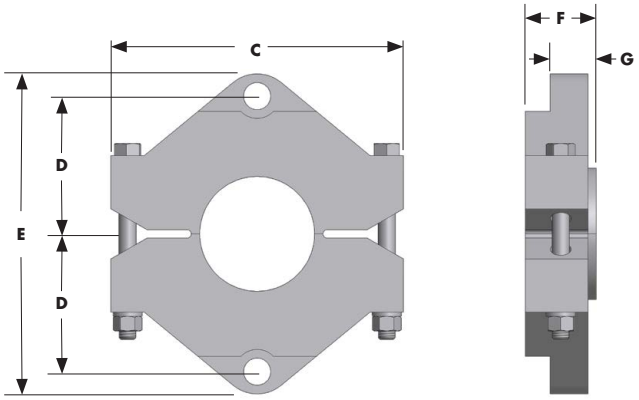

SHAFT DIA	PART #	C	D	E	F	G	BOLTS	WEIGHT
1 ½	CSS112	4 ⅝	2 3/16	5 ⅝	1 7/16	⅞	½	5
2	CSS2	5 ⅜	2 ⅝	6 ½	1 ½	⅞	½	10
2 7/16	CSS2716	6 ⅛	3 1/16	7 ⅝	1 ⅝	1	⅝	15
3	CSS3	6 ¾	3 9/16	8 ⅝	1 ⅝	1	⅝	22
3 7/16	CSS3716	8 ¾	4 ⅛	10 ¼	2 ⅛	1 ¼	¾	30
3 15/16	CSS31516	8 ¾	4 ⅛	10 ½	1 ⅞	1 ⅛	¾	35

FLANGED GLAND SEAL

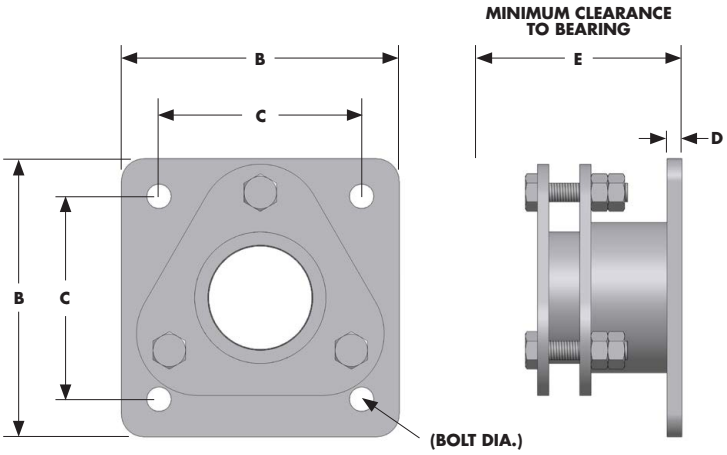

SHAFT DIA	PART #	B	C	D	E	BOLTS	WEIGHT
1 ½	FGS112	5 ⅜	4	½	8	½	11
2	FGS2	6 ½	5 ⅛	½	8	⅝	13
2 7/16	FGS2716	7 ⅜	5 ⅝	½	8	⅝	19
3	FGS3	7 ¾	6	½	8	¾	19
3 7/16	FGS3716	9 ¼	6 ¾	½	8	¾	36
3 15/16	FGS31516	10 ¼	7 ¾	½	8	⅞	39

SHAFT SEALS

SEAL COMPARISON (continued on facing page)

	Guardian Seal	Guardian Seal HT	Guardian Seal SPLIT	PLATE SEAL w/LIP	WASTE SEAL w/LIP
SHAFT WEAR	Low	Low	Low	Low	Low to variable
SEALING, NO PRESSURE	Excellent	Excellent	Good	Poor	Poor
SEALING, LOW PRESSURE	Good	Good	Fair	Poor	Poor
SPLIT DESIGN?	No	No	Yes	No	No
ORIGINAL INSTALLATION	Easy (#3)	Easy (#3)	Easy	Easy (#3)	Easy (#3)
MAINTENANCE	Very easy	Very easy	Very easy	Replace lip	Replace lip
ADJUSTMENT	Not required	Not required	Not required	Not required	Not required
REBUILD KITS	Readily available	Readily available	Readily available	New lip seal	New seal and packing
REBUILD INSTALLATION	Easy (#3)	Easy (#3)	Easy	Press in (#3)	Press in (#3)
PRICE (NEW)	Moderate	Moderate	Moderate to high	Low	Low
MAX TEMP (SEE #6)	Approx 215° F	Approx 400° F	Approx 215° F	Approx 350° F	Approx 350° F
LATERAL MOVEMENT ACCEPTANCE	Excellent	Excellent	Excellent	Good to poor (#7)	Good to poor (#7)
RUN-OUT TOLERATED	Excellent	Excellent	Excellent	Poor	Poor
LONG-TERM MAINT. COST	Very low	Very low	Very low	Low to high	Low to high
SCREW CONVEYOR USE	Very good to excellent	Very good to excellent	Very good to excellent	Limited	Limited
RETROFIT ON STANDARD CONVEYORS	Excellent	Excellent	Excellent	Excellent	Excellent
RETROFIT FOR SPECIAL PATTERNS	Excellent	Excellent	Excellent	Excellent	Requires special parts
FDA/USDA APPROVED?	Yes (#11)	Yes (#11)	Yes (#11)	No	No
STRONG POINTS	Excellent for sealing, best all-around	Excellent for sealing, best all-around	Replace w/o removing bearings, etc	Low cost	Low cost
WEAK POINTS	High temperature applications	Not split	Limited sealing	Poor all-around sealing	Poor all-around sealing

#1: Gland seals have variable sealing capability. Packing material has an effect on sealing. May not seal well with shaft run-out. To obtain excellent sealing, frequent and accurate adjustment is necessary.
#2: Air purge seals vary by material being sealed. May not seal well if initial adjustment is incorrectly performed. Failure of purge air supply will often cause seal failure.
#3: Independent of the installation ease shown, it is necessary to install these over end of shaft which may require bearing and hub removal.
#4: When packing needs pulling, may be difficult to remove. Lantern ring options can be very difficult to remove from housing.
#5: Frequent shaft rebuild or replacement may be necessary, adding considerably to maintenance costs and time.

PHONE 319.364.5600 | 800.452.4027 **FAX** 319.364.6449

SHAFT SEALS

= **BEST** in category
= **POOR** in category

FLANGED PACKING GLAND SEAL	SPLIT GLAND SEAL	AIR PURGE SEAL	SPLIT AIR PURGE SEAL	MECHANICAL SEAL	
High	High	Low	Low	Low	SHAFT WEAR
Excellent (#1)	Fair (#1)	Good (#2)	Good (#2)	Excellent	SEALING, NO PRESSURE
Excellent (#1)	Fair (#1)	Good (#2)	Good (#2)	Excellent	SEALING, LOW PRESSURE
Excellent	Yes	No	Yes	Excellent	SPLIT DESIGN?
Somewhat difficult	Usually easy	Difficult (#3)	Difficult	Varies	ORIGINAL INSTALLATION
Time consuming	Easy but frequent	Difficult	Difficult	Varies	MAINTENANCE
Medium to difficult	Medium	Difficult	Difficult	Varies	ADJUSTMENT
New packing	New packing	Often special order	Special order	Varies	REBUILD KITS
Moderate to difficult (Notes #4 & #5)	Easy (#5)	Difficult (#3)	Difficult	Difficult	REBUILD INSTALLATION
Moderate	Low to moderate	Moderate to high	High to very high	Very high	PRICE (NEW)
Varies, typically 800°+ F	Varies, typically 800°+ F	Approx 600° F w/ high temp version	Approx 600° F w/ high temp version	Varies	MAX TEMP (SEE #6)
Fair (#8)	Fair (#8)	Fair (#9)	Fair (#9)	Varies	LATERAL MOVEMENT ACCEPTANCE
Slight run-out OK	Slight run-out OK	Excellent	Excellent	Poor	RUN-OUT TOLERATED
High (#4 & #5)	Low to moderate	Low to moderate	Low to High	High (#10)	LONG-TERM MAINT. COST
Good for some applications	Good for some applications	Very good	Very good	Not recommended	SCREW CONVEYOR USE
Requires pedestal end plates, new shafts	Requires pedestal end plates, new shafts	Good to excellent	Good to excellent	Usually poor	RETROFIT ON STANDARD CONVEYORS
Usually poor	Usually poor	Fair (#12)	Fair (#12)	Usually poor	RETROFIT FOR SPECIAL PATTERNS
Potentially	Potentially	Potentially	Potentially	Potentially	FDA/USDA APPROVED?
Good pressure, high temp, packing readily available	Can be used inside troughs, packing easy to service	Excellent for problem material and run-out	Excellent for problem material and run-out	Limited to applications with no run-out	STRONG POINTS
Can be hard to service, ruins shafts, requires pedestal	Only fair sealing, ruins shafts, requires pedestal	Difficult to adjust, special parts required	Difficult to adjust, special parts required	Cost, parts a problem, can't allow run-out	WEAK POINTS

#6: With some seals, maximum temperature depends on available lip materials, packing, components, purge media and other factors.
#7: Debris on shaft will rapidly destroy lip seal's ability to handle lateral movement.
#8: When shaft becomes grooved by packing, lateral movement is not accommodated well.
#9: Frequent lateral movement will cause varying face pressures in the seal which can become problematical in time.
#10: Costs and time run high due to not accommodating shaft run-out on typical screw installations. Initial costs and rebuild costs are high.
#11: If used with food-grade grease.
#12: Special fabrication with long lead time required. Will then require non-standard service parts.

END BEARINGS

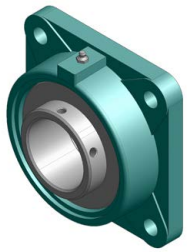	**FLANGE MOUNTED BALL BEARING:** Primarily designed for radial loading. It can handle only a minimal amount of thrust but does allow for expansion so it is typically located at the tail end of a conveyor.
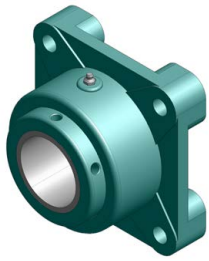	**FLANGE MOUNTED ROLLER BEARING:** Primarily designed for combined thrust and radial loading. It does not allow for expansion and is typically located at the drive end of a conveyor.
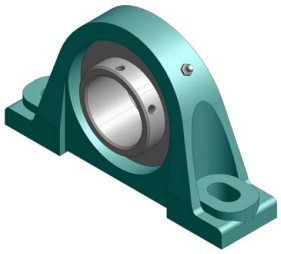	**PILLOW BLOCK BALL BEARING:** Primarily designed for radial loading. This style is useful for bearing isolation to avoid temperature extremes and contamination from conveyed products. Typically located at the tail end.
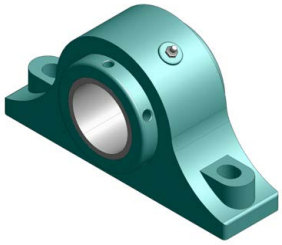	**PILLOW BLOCK ROLLER BEARING:** Primarily designed for combined thrust and radial loading. This style is useful for bearing isolation to avoid temperature extremes and contamination from conveyed products. Typically located at the drive end.
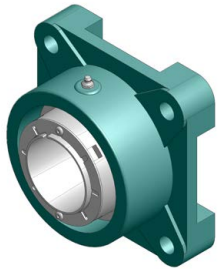	**FLANGE MOUNTED SPHERICAL ROLLER BEARING:** Designed to allow for expansion like ball bearings but available in larger sizes. Typically located at the tail end of larger conveyors.
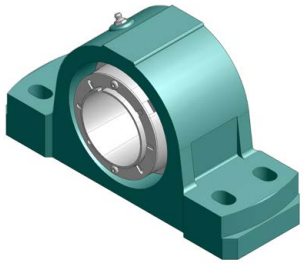	**PILLOW BLOCK SPHERICAL ROLLER BEARING:** Same as flange mounted version but provides bearing isolation to avoid temperature extremes and contamination from conveyed products

PHONE 319.364.5600 | 800.452.4027 **FAX** 319.364.6449

END BEARINGS

FLANGE MOUNTED BALL BEARING

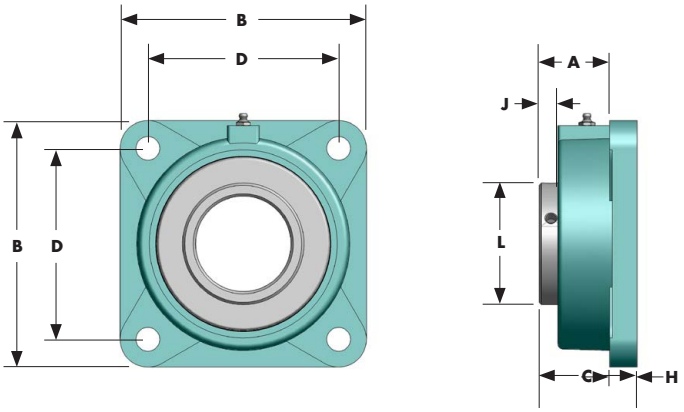

SHAFT	PART #	A	B	C	D	H	J	L	BOLT DIA	WEIGHT
1 ½	F4B-SC-108	1 11/16	5 ⅛	1 ⅞	4	9/16	17/32	2 3/64	½	5
2	F4B-SCM-200	1 27/32	6 ½	2 5/32	5 ⅛	11/16	9/16	2 23/32	⅝	10
2 7/16	F4B-SC-207	1 63/64	6 ⅞	2 9/32	5 ⅝	11/16	9/16	2 31/32	⅝	11
3	F4B-SCM-300	2 11/32	7 ¾	3 3/32	6	⅞	19/32	3 53/64	¾	21
3 7/16	F4B-SCM-307	2 31/64	8 7/16	3 11/32	6 ¾	1	9/16	4 23/64	¾	28

FLANGE MOUNTED ROLLER BEARING

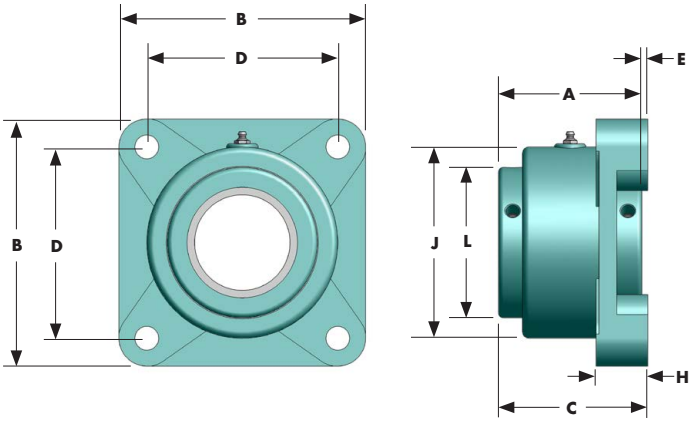

SHAFT	PART #	A	B	C	D	E	H	J	L	BOLT DIA	WEIGHT
1 ½	F4B-E-108	3 ⅜	5 ⅜	2 31/32	4 ⅛	⅛	1 3/16	4 3/16	3 3/16	½	11
2	F4B-E-200	3 ½	5 ⅝	3 3/32	4 ⅜	⅛	1 3/16	4 7/16	3 7/16	½	12
2 7/16	F4B-E-207	4	6 ⅞	3 9/16	5 ⅜	3/16	1 ½	5 5/16	4 1/16	⅝	20
3	F4B-E-300	4 ½	7 ¾	3 15/16	6	3/16	1 ⅝	6	4 23/32	¾	26
3 7/16	F4B-E-307	5	9 ¼	4 ½	7	¼	1 ⅞	7 ¼	5 ½	¾	50

END BEARINGS

PILLOW BLOCK BALL BEARING

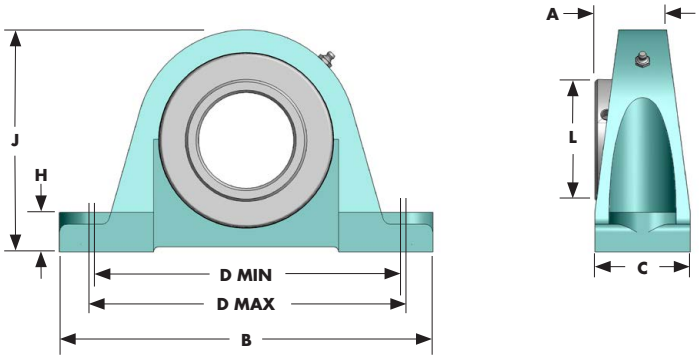

SHAFT	PART #	A	B	C	D MIN	D MAX	H	J	L	M	BOLT DIA	WEIGHT
1 ½	P2B-SC-108	1 11/16	7 ¼	1 15/16	5 3/16	5 ⅞	15/16	4 3/16	2 3/64	2 ⅛	½	6
2	P2B-SCM-200	1 27/32	8 ⅞	2 5/16	6 ⅜	7 7/16	⅞	4 31/32	2 23/32	2 ½	⅝	9
2 7/16	P2B-SC-207	1 53/64	9 ½	2 ⅜	6 ⅞	7 15/16	⅞	5 13/32	2 31/32	2 ¾	⅝	11
3	P2B-SCM-300	2 11/32	11 ¾	3	8 ½	9 ½	1 ¼	6 31/32	3 53/64	3 ½	⅞	21
3 7/16	P2B-SCM-307	2 31/64	14	3 ⅜	10 ⅚	11 ⅝	1 5/16	8	4 23/64	4	⅞	32

Heavy duty applications may require a 4-bolt pillow block bearing.

PILLOW BLOCK ROLLER BEARING

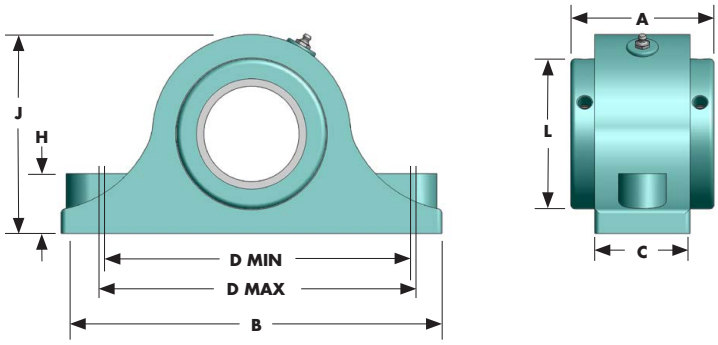

SHAFT	PART #	A	B	C	D MIN	D MAX	H	J	L	M	BOLT DIA	WEIGHT
1 ½	P2B-E-108	3 ⅜	7 ⅞	2 ⅜	6 ⅛	6 ⅜	1 ¼	4 ¼	3 3/16	2 ⅛	½	10
2	P2B-E-200	3 ½	8 ⅞	2 ½	6 ⅞	7 ⅛	1 5/16	4 ½	3 7/16	2 ¼	⅝	12
2 7/16	P2B-E-207	4	10 ½	2 ⅞	8 ⅜	8 ⅝	1 ⅝	5 ½	4 1/16	2 ¾	⅝	20
3	P2B-E-300	4 ½	12	3	9 5/16	9 11/16	1 ⅞	6 ¼	4 23/32	3 ⅛	¾	27
3 7/16	P2B-E-307	5	14	3 ½	10 13/16	11 3/16	2 ¼	7 ½	5 ½	3 ¾	⅞	46

Heavy duty applications may require a 4-bolt pillow block bearing.

PHONE 319.364.5600 | 800.452.4027 **FAX** 319.364.6449

INLET/DISCHARGE BOLT PATTERNS

STANDARD INLETS & DISCHARGES

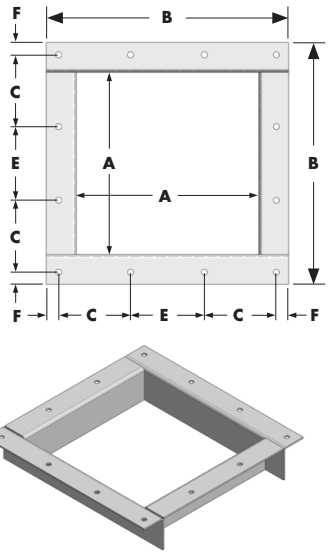

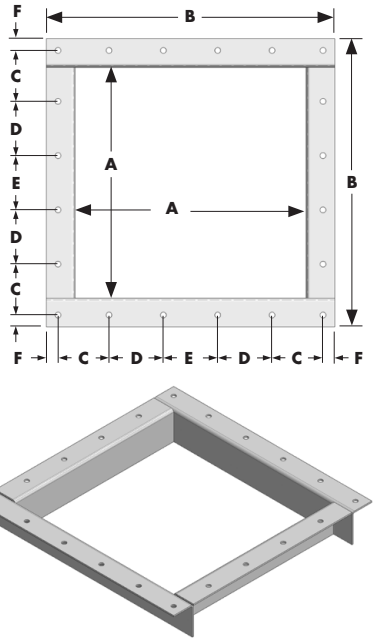

12 BOLTS

20 BOLTS

SIZE	INLET PART #	DISCH. PART #	A	B	C	D	E	F	HEIGHT	THICKNESS	# HOLES	BOLT DIA	STD WT
6	CI6	CSD6	7	10	2 13/16	-	3	11/16	3	12 ga	12	3/8	4.3
9	CI9	CSD9	10	13	4	-	4	1/2	3	10 ga	12	3/8	7.4
10	CI10	CSD10	11	14 1/4	4 5/16	-	4 3/8	5/8	3	10 ga	12	3/8	8.3
12	CI12	CSD12	13	17 1/4	5 1/8	-	5 1/4	7/8	3	10 ga	12	3/8	11.2
14	CI14	CSD14	15	19 1/4	3 1/2	3 1/2	3 1/2	7/8	3	10 ga	20	3/8	12.6
16	CI16	CSD16	17	21 1/4	3 3/4	4	4	7/8	3	10 ga	20	3/8	14.1
18	CI18	CSD18	19	24 1/4	4 7/16	4 3/8	4 3/8	1 1/8	3	10 ga	20	1/2	17.5
20	CI20	CSD20	21	26 1/4	4 7/8	4 3/4	4 3/4	1 1/8	3	10 ga	20	1/2	19.2
24	CI24	CSD24	25	30 1/4	5 5/8	5 5/8	5 1/2	1 1/8	3	3/16	20	1/2	30.6
30	CI30	CSD30	31	37 1/4	6 7/8	6 7/8	7	1 3/8	3	3/16	20	5/8	41.3
36*	CI36	CSD36	37	43 1/2	6 3/4	6 3/4	-	1 1/2	4	3/16	24	5/8	58.3

* Size 36 has (24) holes equal spaced @ 6-3/4"

TUBULAR INLETS & DISCHARGES

SCREW SIZE	FLANGE BOLTS	INSIDE DIA A*	BOLT CIRCLE B**	ROUND INLET PART #	ROUND DISCH. PART #
6	(6) 3/8	7	8 7/8	CI6-T	CSD6-T
9	(8) 3/8	10	12 1/2	CI9-T	CSD9-T
10	(8) 3/8	11	13 1/4	CI10-T	CSD10-T
12	(8) 1/2	13	15 7/8	CI12-T	CSD12-T
14	(8) 1/2	15	17 7/8	CI14-T	CSD14-T
16	(8) 5/8	17	20	CI16-T	CSD16-T
18	(10) 5/8	19	22	CI18-T	CSD18-T
20	(10) 5/8	21	24 3/8	CI20-T	CSD20-T
24	(12) 5/8	25	28 1/2	CI24-T	CSD24-T

* Inside diameter of inlet or discharge, not the flange ID
** Bolt pattern shown here is for round inlets/discharges as well as tube trough end flanges.

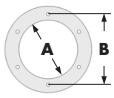

6 BOLTS

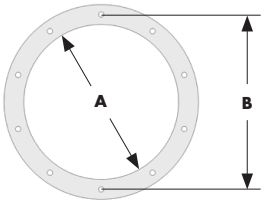

10 BOLTS

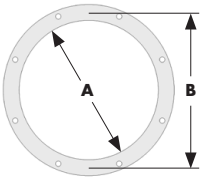

8 BOLTS

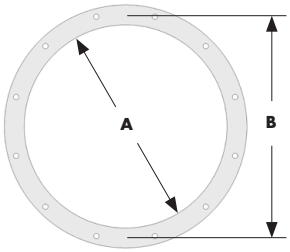

12 BOLTS

DISCHARGES

STD. DISCHARGE

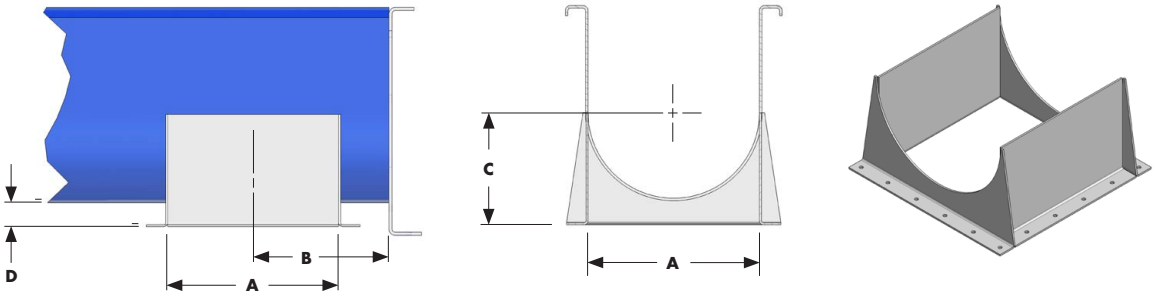

FLUSH END DISCHARGE

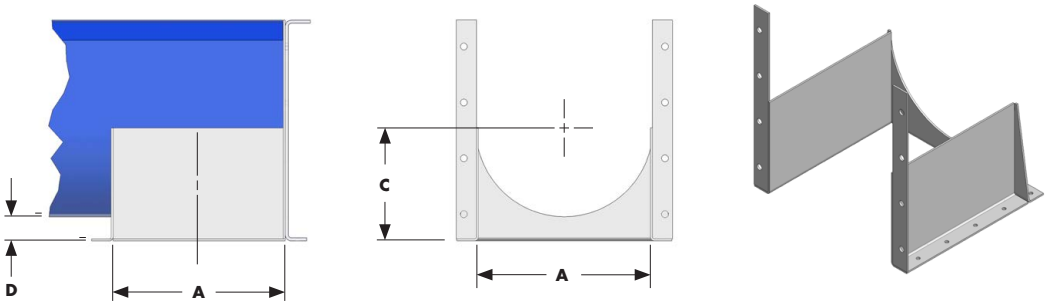

SCREW SIZE	STANDARD PART #	FLUSH END PART #	DISCHARGE THICKNESS	A	B (MIN)	C	TROUGH THICKNESS	D	STD. WEIGHT	FLUSH END WEIGHT
6	CSD612	CSD612-F	12 ga	7	6	5	12 ga 10 ga	1 3/8 1 3/8	6.1	5.9
9	CSD910	CSD910-F	10 ga	10	8	7 1/8	12 ga 10 ga	2 2	10.9	14.6
9	CSD97	CSD97-F	3/16	10	8	7 1/8	3/16	1 15/16	14.9	13.7
10	CSD1010	CSD1010-F	10 ga	11	9	7 7/8	12 ga 10 ga	2 1/4 2 1/4	13.2	19.6
10	CSD107	CSD107-F	3/16	11	9	7 7/8	3/16	2 3/16	18.0	16.9
12	CSD1210	CSD1210-F	10 ga	13	10 1/2	8 7/8	12 ga 10 ga	2 1/4 2 1/4	18.3	17.8
12	CSD127	CSD127-F	3/16	13	10 1/2	8 7/8	3/16 1/4	2 3/16 2 1/8	25.2	27.0
14	CSD1410	CSD1410-F	10 ga	15	11 1/2	10 1/8	10 ga	2 1/2	22.9	23.3
14	CSD147	CSD147-F	3/16	15	11 1/2	10 1/8	3/16 1/4	2 7/16 2 3/8	36.7	34.8
16	CSD1610	CSD1610-F	10 ga	17	13 1/2	11 1/8	10 ga	2 1/2	27.4	29.1
16	CSD167	CSD167-F	3/16	17	13 1/2	11 1/8	3/16 1/4	2 7/16 2 3/8	37.7	40.5
18	CSD1810	CSD1810-F	10 ga	19	14 1/2	12 3/8	10 ga	2 3/4	35.2	36.5
18	CSD187	CSD187-F	3/16	19	14 1/2	12 3/8	3/16 1/4	2 11/16 2 5/8	56.8	56.9
20	CSD2010	CSD2010-F	10 ga	21	15 1/2	13 3/8	10 ga	2 3/4	40.7	42.3
20	CSD207	CSD207-F	3/16	21	15 1/2	13 3/8	3/16 1/4	2 11/16 2 5/8	56.5	61.6
24	CSD2410	CSD2410-F	10 ga	25	17 1/2	15 3/8	10 ga	2 3/4	53.1	54.1
24	CSD247	CSD247-F	3/16	25	17 1/2	15 3/8	3/16 1/4	2 11/16 2 5/8	73.0	80.1
30	CSD3010	CSD3010-F	10 ga	31	21	18 3/8	10 ga	2 3/4	77.9	118
30	CSD307	CSD307-F	3/16	31	21	18 3/8	3/16 1/4	2 11/16 2 5/8	107.5	124
36	CSD367	CSD367-F	3/16	37	25	23	3/16 1/4	4 5/16 4 1/4	156.4	175

Flange bolt pattern on p.81

PHONE 319.364.5600 | 800.452.4027 **FAX** 319.364.6449

DISCHARGES

POSITIVE DISCHARGE

The Positive Discharge is designed to help in difficult discharge situations such as sticky materials, high speed conveyors with multiple discharges (most materials tend to carry to one side of the trough and can bypass a standard discharge), etc. They also help make flow rates out of the conveyor more consistent.

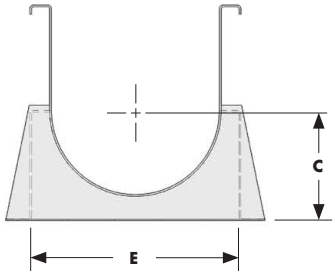

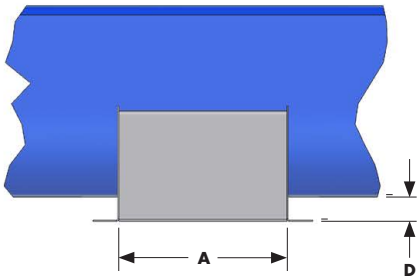

"WIDE" OPTION
(length same as std. discharge)

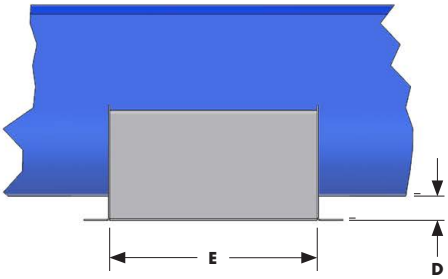

"WIDE & LONG" OPTION

SCREW SIZE	PART # (WIDE)	PART # (WIDE & LONG)	DISCHARGE THICKNESS	A	C	E	TROUGH THICKNESS	D	WEIGHT -W	WEIGHT -WL
6	CSD612-W	CSD612-WL	12 ga	7	5	10	12 ga 10 ga	1 3/8 1 3/8	7	8
9	CSD910-W	CSD910-WL	10 ga	10	7 1/8	13	12 ga 10 ga	2 2	16	19
9	CSD97-W	CSD97-WL	3/16	10	7 1/8	13	3/16	1 15/16	22	25
10	CSD1010-W	CSD1010-WL	10 ga	11	7 7/8	15	12 ga 10 ga	2 1/4 2 1/4	20	24
10	CSD107-W	CSD107-WL	3/16	11	7 7/8	15	3/16	2 3/16	27	32
12	CSD1210-W	CSD1210-WL	10 ga	13	8 7/8	17	12 ga 10 ga	2 1/4 2 1/4	24	28
12	CSD127-W	CSD127-WL	3/16	13	8 7/8	17	3/16 1/4	2 3/16 2 1/8	33	38
14	CSD1410-W	CSD1410-WL	10 ga	15	10 1/8	19	10 ga	2 1/2	31	41
14	CSD147-W	CSD147-WL	3/16	15	10 1/8	19	3/16 1/4	2 7/16 2 3/8	43	49
16	CSD1610-W	CSD1610-WL	10 ga	17	11 1/8	21	10 ga	2 1/2	36	41
16	CSD167-W	CSD167-WL	3/16	17	11 1/8	21	3/16 1/4	2 7/16 2 3/8	50	56
18	CSD1810-W	CSD1810-WL	10 ga	19	12 3/8	25	10 ga	2 3/4	47	55
18	CSD187-W	CSD187-WL	3/16	19	12 3/8	25	3/16 1/4	2 11/16 2 5/8	64	75
20	CSD2010-W	CSD2010-WL	10 ga	21	13 3/8	25	10 ga	2 3/4	50	55
20	CSD207-W	CSD207-WL	3/16	21	13 3/8	25	3/16 1/4	2 11/16 2 5/8	68	75
24	CSD2410-W	CSD2410-WL	10 ga	25	15 3/8	31	10 ga	2 3/4	70	80
24	CSD247-W	CSD247-WL	3/16	25	15 3/8	31	3/16 1/4	2 11/16 2 5/8	97	110
30	CSD3010-W	CSD3010-WL	10 ga	31	18 3/8	37	10 ga	2 3/4	96	107
30	CSD307-W	CSD307-WL	3/16	31	18 3/8	37	3/16 1/4	2 11/16 2 5/8	133	148
36	CSD367-W	CSD367-WL	3/16	37	23	43 1/2	3/16 1/4	4 5/16 4 1/4	192	212

TROUGH END FLANGES & GASKETS

U-TROUGH

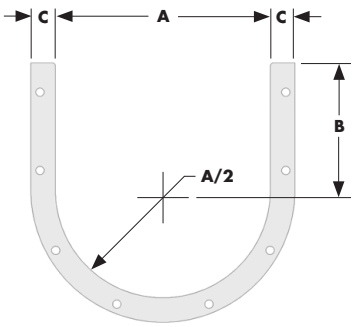

(Bolt pattern on p.86)

SCREW DIA	FLANGE PART #	"A" IF TROUGH THICKNESS IS...		B	C	FLANGE THICKNESS	FLANGE BOLTS	FLANGE WEIGHT	GASKET PART #
		≤10 GA	3/16" - 1/4"						
6	CFP6-U	7 1/4	7 3/8	4 1/2	1 1/4	3/16	3/8	1.5	CFG6-U
9	CFP9-U	10 1/4	10 1/2	6 1/8	1 3/4	3/16	3/8	2.4	CFG9-U
10	CFP10-U	11 1/4	11 1/2	6 3/8	1 3/4	3/16	3/8	3.1	CFG10-U
12	CFP12-U	13 1/4	13 1/2	7 3/4	2	1/4	1/2	5.5	CFG12-U
14	CFP14-U	15 1/4	15 1/2	9 1/4	2	1/4	1/2	6.5	CFG14-U
16	CFP16-U	17 1/4	17 1/2	10 5/8	2	1/4	5/8	7.4	CFG16-U
18	CFP18-U	19 1/4	19 1/2	12 1/8	2 1/2	1/4	5/8	10.4	CFG18-U
20	CFP20-U	21 1/4	21 1/2	13 1/2	2 1/2	1/4	5/8	11.5	CFG20-U
24	CFP24-U	25 1/4	25 1/2	16 1/2	2 1/2	1/4	5/8	13.5	CFG24-U
30	CFP30-U	31 1/4	31 1/2	19 3/4	3 1/8	1/4	5/8	22.6	CFG30-U
36	CFP36-U	37 1/4	37 1/2	24	3 1/4	3/8	5/8	41.5	CFG36-U

Contact Conveyor Eng. & Mfg. for larger sizes.

TUBE TROUGH

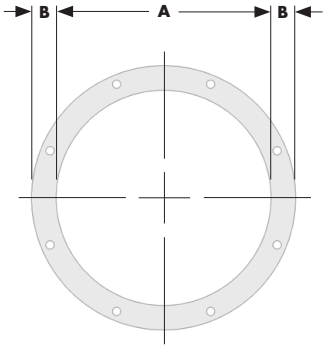

(Bolt pattern on p.81)

SCREW DIA	FLANGE PART #	"A" IF TROUGH THICKNESS IS...		B	FLANGE THICKNESS	FLANGE BOLTS	FLANGE WEIGHT	GASKET PART #
		≤10 GA	3/16" - 1/4"					
6	CFP6-T	7 5/16	7 9/16	1 1/4	3/16	3/8	2.0	CFG6-T
9	CFP9-T	10 5/16	10 9/16	1 3/4	3/16	3/8	3.0	CFG9-T
10	CFP10-T	11 5/16	11 9/16	1 3/4	3/16	3/8	3.2	CFG10-T
12	CFP12-T	13 5/16	13 9/16	2	1/4	1/2	6.9	CFG12-T
14	CFP14-T	15 5/16	15 9/16	2	1/4	1/2	7.8	CFG14-T
16	CFP16-T	17 5/16	17 9/16	2	1/4	5/8	8.7	CFG16-T
18	CFP18-T	19 5/16	19 9/16	2 1/2	1/4	5/8	12.3	CFG18-T
20	CFP20-T	21 5/16	21 9/16	2 1/2	1/4	5/8	13.4	CFG20-T
24	CFP24-T	25 5/16	25 9/16	2 1/2	1/4	5/8	15.6	CFG24-T

Contact Conveyor Eng. & Mfg. for larger sizes.

PHONE 319.364.5600 | 800.452.4027 **FAX** 319.364.6449

TROUGH END FLANGES & GASKETS

FLARED TROUGH

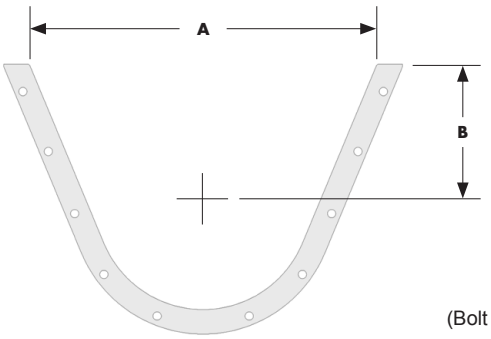

(Bolt pattern on p.87)

SCREW DIA	FLANGE PART #	"A" IF TROUGH THICKNESS IS...		B	FLANGE THICKNESS	FLANGE BOLTS	FLANGE WEIGHT	GASKET PART #
		≤10 GA	3⁄16″ - ¼″					
6	CFP6-V	14 ¼	14 ½	7	3⁄16	⅜	2	CFG6-V
9	CFP9-V	18 ¼	18 ½	9	3⁄16	⅜	3	CFG9-V
10	CFP10-V	20 ¼	20 ½	9 ½	3⁄16	⅜	4	CFG10-V
12	CFP12-V	22 ¼	22 ½	10	¼	½	6	CFG12-V
14	CFP14-V	24 ¼	24 ½	11	¼	½	7	CFG14-V
16	CFP16-V	28 ¼	28 ½	11 ½	¼	⅝	8	CFG16-V
18	CFP18V	31 ¼	31 ½	12 ⅛	¼	⅝	10	CFG18-V
20	CFP20-V	34 ¼	34 ½	13 ½	¼	⅝	11	CFG20-V
24	CFP24-V	40 ¼	40 ½	16 ½	¼	⅝	13	CFG24-V

Contact Conveyor Eng. & Mfg. for larger sizes.

GASKETS

It is often necessary to better seal screw conveyors to prevent liquid or dusty products from getting out and/or to prevent outside elements/ contaminants from getting in. Gaskets of various materials, thicknesses and temperature ratings can be installed at trough end joints as well as between the troughs and covers. (Otherwise, standard sealing of complete conveyors involves Silicone caulk at trough joints)

MATERIAL	TEMP RANGE	NOTES	FDA APPROVED?
Neoprene	-40˚F to +230˚F intermittent to +250˚F	• Good resistance to oils, sunlight and aging. • High resistance to permanent compression • Good resistance to ammonia and carbon dioxide	Yes
Nitrile (Buna-N)	-40˚F to +212˚F intermittent to +230˚F	• Good resistance to oils, acids and bases • Excellent resistance to permanent compression • Poor resistance to ethanol, ozone, sunlight and weather	Yes
Natural Rubber	-67˚F to +122˚F intermittent to +140˚F	• High resilience, tensile strength and tear resistance • Poor resistance to chemicals and petroleum derivatives • Inferior to many of the synthetics in heat aging as well as resistance to sunlight, oxygen, ozone, solvents and oils	No
Silicone	-67˚F to +400˚F intermittent to +450˚F	• Retains good elastomeric properties at low and high temps • Should not be exposed to fuels, solvents or silicone fluids • Excellent resistance to ozone, aging and weather	Yes
Viton	-40˚F to +400˚F intermittent to +500˚F	• Excellent resistance to high temperatures, ozone, oxygen, fuels, mineral oil and synthetic hydraulic fluids	Yes
Teflon (PTFE)	-328˚F to +500˚F intermittent to +550˚F	• Excellent chemical, mechanical and thermal properties • Excellent corrosion resistance and weathering • Nonflammable, very low frictional coefficient, high heat resist.	Yes

(Gasket part numbers on p.84 & p.85)

TROUGH END FLANGE BOLT PATTERN

U-TROUGH

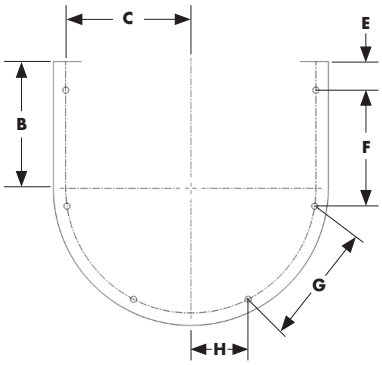

6 HOLE FLANGE PATTERN

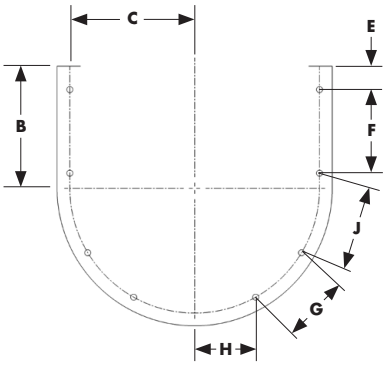

8 HOLE FLANGE PATTERN

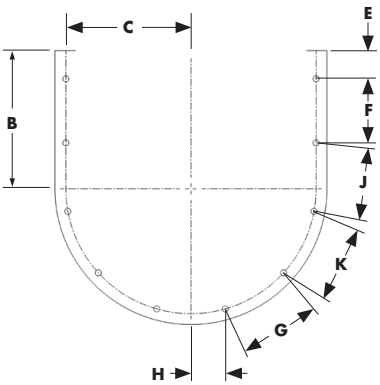

10 HOLE FLANGE PATTERN

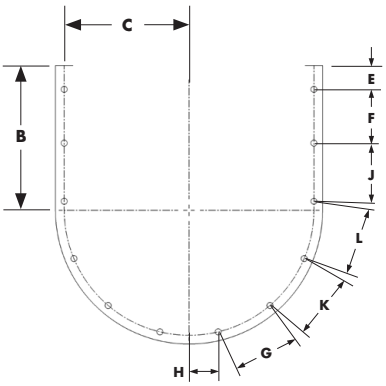

12 HOLE FLANGE PATTERN

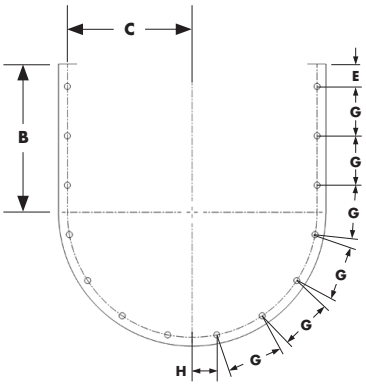

14 HOLE FLANGE PATTERN

(More end flange details on p.84) (Tube Trough bolt pattern on p.81)

SCREW DIA	BOLTS		B	C	E	F	G	H	J	K	L
	DIA	HOLES									
6	⅜	6	4 ½	4 7/16	1 1/32	4 ⅛	4 1/16	2 1/32	--	--	--
9	⅜	8	6 ⅛	6 ¼	1 3/16	4 ⅛	3 ¾	2 9/16	4 ⅛	--	--
10	⅜	8	6 ⅜	6 ⅝	2 ¼	3 ½	4 3/16	2 17/32	4 ⅛	--	--
12	½	8	7 ¾	7 15/16	1 ½	5 5/16	4 1/16	3 ⅞	5 3/16	--	--
14	½	8	9 ¼	8 15/16	2 17/32	5 ⅝	5 15/16	3	5 15/16	--	--
16	⅝	8	10 ⅝	10	2 ⅝	6 ⅜	6 ⅝	3 ¾	6 ⅝	--	--
18	⅝	10	12 ⅛	11	2 23/32	5 15/16	5 ⅞	2 15/16	5 ⅞	5 ⅞	--
20	⅝	10	13 ½	12 3/16	2 25/32	6 ¼	6 11/16	3 11/32	6 11/16	6 11/16	--
24	⅝	12	16 ½	14 ¼	2 25/32	6 ⅛	6 ⅝	3 5/16	6 ⅝	6 ⅝	6 ⅝
30	⅝	12	19 ¾	17 ¼	2 25/32	8	7 15/16	4	8	7 15/16	7 15/16
36	⅝	14	24	20 ¼	3 ⅝	--	8	4	--	--	--

PHONE 319.364.5600 | 800.452.4027 **FAX** 319.364.6449

TROUGH END FLANGE BOLT PATTERN

FLARED TROUGH

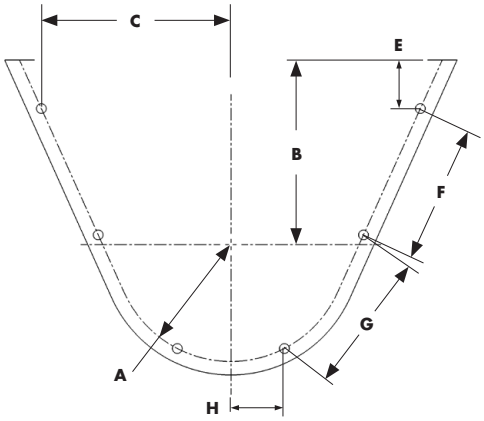

6 HOLE FLANGE PATTERN

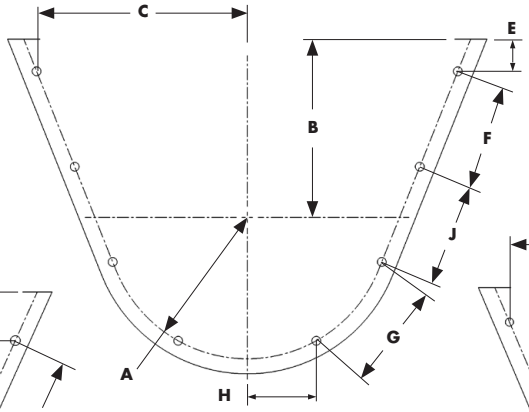

8 HOLE FLANGE PATTERN

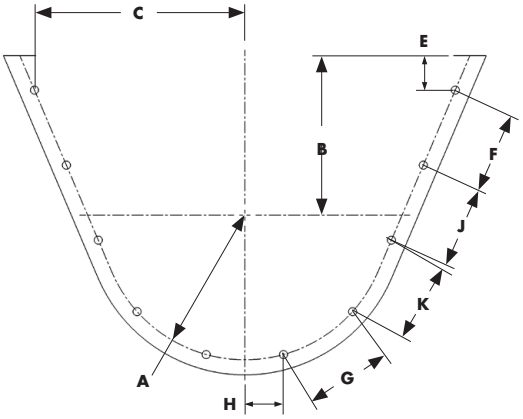

10 HOLE FLANGE PATTERN

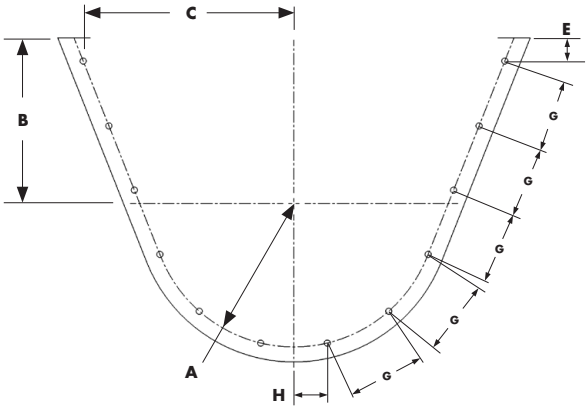

12 HOLE FLANGE PATTERN

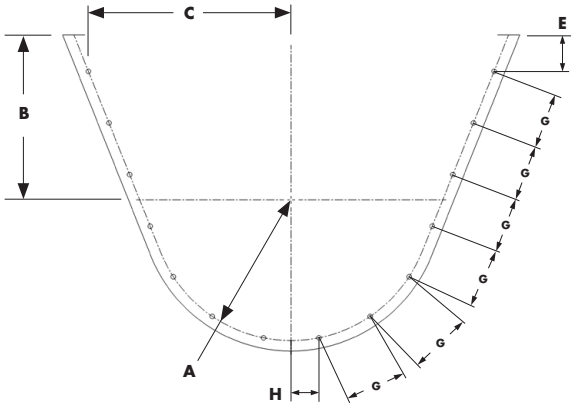

14 HOLE FLANGE PATTERN

(More end flange details on p.85) (Tube Trough bolt pattern on p.81)

SCREW DIA	BOLTS		A	B	C	E	F	G	H	J	K	L
	DIA	HOLES										
6	3/8	6	4 7/16	7	7 3/16	1 27/32	5 1/4	5 1/4	2 1/32	--	--	--
9	3/8	8	6 1/4	9	9 21/32	1 43/64	5	5	2 9/16	5	--	--
10	3/8	8	6 5/8	9 1/2	10 15/32	1 49/64	5 1/2	5	2 3/4	5 1/2	--	--
12	1/2	8	7 15/16	10	11 13/16	1 13/16	5 3/4	5 3/4	3 7/8	5 3/4	--	--
14	1/2	10	8 15/16	11	12 49/64	2 1/16	5 1/8	5 1/8	3	5 1/8	5 1/8	--
16	5/8	10	10	11 1/2	14 11/16	2 15/64	5 1/2	5 1/2	3 3/4	5 1/2	5 1/2	--
18	5/8	10	11	12 1/8	16	2 5/8	6 3/16	6 3/16	2 15/16	6 3/16	6 3/16	--
20	5/8	10	12 3/16	13 1/2	17 7/8	2 9/32	7	7	3 11/32	7	7	--
24	5/8	12	14 1/4	16 1/2	20 61/64	2 5/16	6 7/8	6 7/8	3 5/16	6 7/8	6 7/8	6 7/8
30	5/8	12	17 1/4	19 3/4	25 9/64	3 1/32	--	8 1/4	3 15/16	--	--	--
36	5/8	14	20 1/4	24	29 3/16	5 1/4	--	8	3 31/32	--	--	--

SLIDE GATES

PNEUMATIC, FLAT

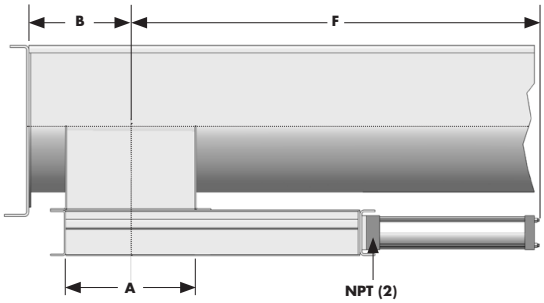

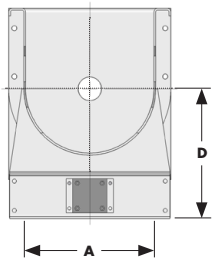

SIZE	PART #	A	B (MIN)	D	F	WEIGHT
6	FSG6-P	7	6	11	25	45
9	FSG9-P	10	8	13 ⅛	33	65
10	FSG10-P	11	9	13 ⅞	35 ½	90
12	FSG12-P	13	10 ½	14 ⅞	40 ½	118
14	FSG14-P	15	11 ½	16 ⅛	45 ½	135
16	FSG16-P	17	13 ½	17 ⅛	50 ½	152
18	FSG18-P	19	14 ½	18 ⅜	55 ½	175
20	FSG20-P	21	15 ½	19 ⅜	60 ½	200
24	FSG24-P	25	17 ½	21 ⅜	69 ½	225
30	FSG30-P	31	21	24 ¼	88 ⅞	250
36	FSG36-P	37	25	29	103 ⅞	392

RACK AND PINION, FLAT

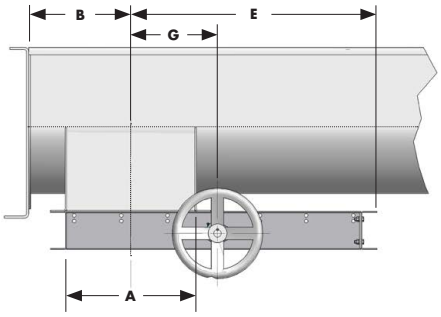

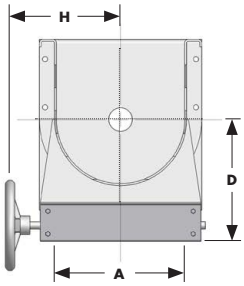

SIZE	PART #	A	B (MIN)	D	E	H	WEIGHT
6	FSG6-RP	7	6	11	19 ¼	8	31
9	FSG9-RP	10	8	13 ⅛	23 ¾	9 ½	49
10	FSG10-RP	11	9	13 ⅞	25 ¼	10 ⅛	60
12	FSG12-RP	13	10 ½	14 ⅞	28 ¼	11 ⅝	72
14	FSG14-RP	15	11 ½	16 ⅛	31 ¼	12 ⅝	82
16	FSG16-RP	17	13 ½	17 ⅛	34 ¼	13 ⅝	96
18	FSG18-RP	19	14 ½	18 ⅜	37 ¼	15 ⅛	106
20	FSG20-RP	21	15 ½	19 ⅜	40 ¼	16 ⅛	148
24	FSG24-RP	25	17 ½	21 ⅜	46 ¼	18 ⅛	160
30	FSG30-RP	31	21	24 ¼	54 ⅝	22	214
36	FSG36-RP	37	25	29	63 ⅝	25 3/16	441

Dimensions on gates are subject to change and will vary according to actuation methods. Dimensions shown for general reference only.
Contact Conveyor Eng. & Mfg. for precise measurements.

PHONE 319.364.5600 | 800.452.4027 **FAX** 319.364.6449

SLIDE GATES

ELECTRIC, FLAT

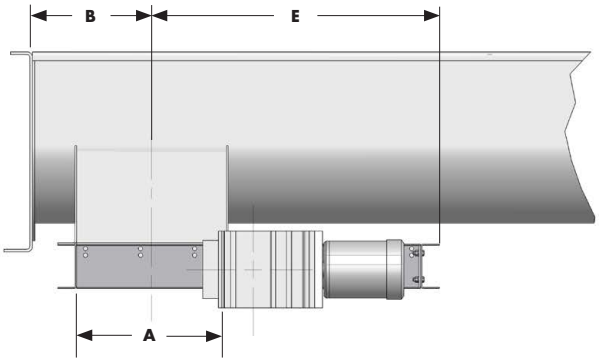

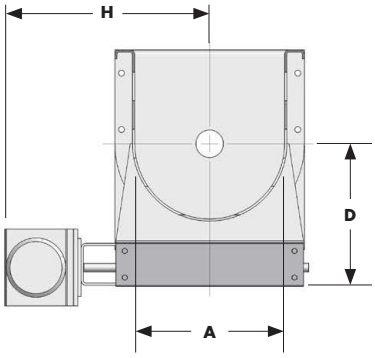

SIZE	PART #	A	B (MIN)	D	E	H	WEIGHT
12	FSG12-E	13	10 ½	14 ⅞	28 ¼	19 ⅞	184
14	FSG14-E	15	11 ½	16 ⅛	31 ¼	21 ⅝	194
16	FSG16-E	17	13 ½	17 ⅛	34 ¼	23 5/16	208
18	FSG18-E	19	14 ½	18 ⅜	37 ¼	23 9/16	218
20	FSG20-E	21	15 ½	19 ⅜	40 ¼	23 13/16	260
24	FSG24-E	25	17 ½	21 ⅜	46 ¼	25 ⅞	272
30	FSG30-E	31	21	24 ⅜	54 ⅝	31 5/16	326
36	FSG36-E	37	25	29	63 ⅝	31 ⅞	553

PNEUMATIC, CURVED

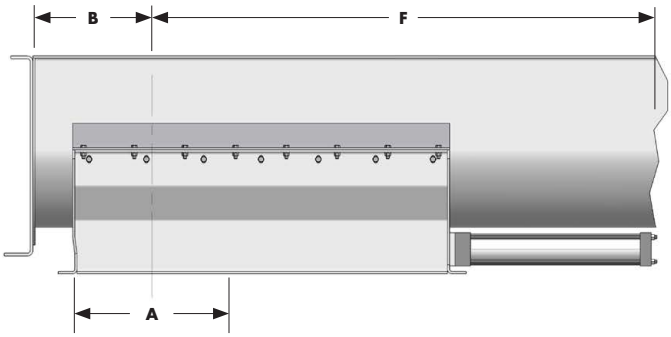

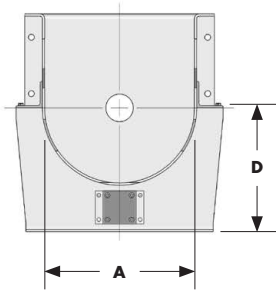

SIZE	PART #	A	B (MIN)	D	F	WEIGHT
6	CSG6-P	7	6	7 ½	30 ⅞	42
9	CSG9-P	10	8	9 ½	35 ⅜	62
10	CSG10-P	11	9	9 ½	38 ⅞	72
12	CSG12-P	13	10 ½	14 ⅞	44 7/16	103
14	CSG14-P	15	11 ½	12 15/16	47 ⅝	120
16	CSG16-P	17	13 ½	14	56 ⅝	148
18	CSG18-P	19	14 ½	14 ⅞	58 15/16	170
20	CSG20-P	21	15 ½	16 11/16	61 ⅝	200
24	CSG24-P	25	17 ½	18 ¾	72 ⅜	251
30	CSG30-P	31	20 ½	21 11/16	88 ⅝	492
36	CSG36-P	37	25	26 15/16	105 1/16	675

Dimensions on gates are subject to change and will vary according to actuation methods. Dimensions shown for general reference only. Contact Conveyor Eng. & Mfg. for precise measurements.

SLIDE GATES

RACK AND PINION, CURVED

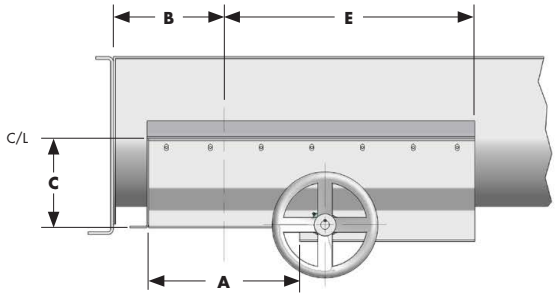

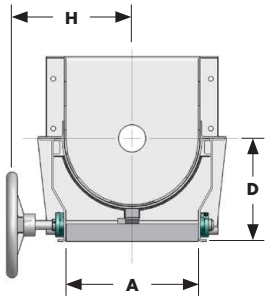

SIZE	PART #	A	B (MIN)	C	D	E	H	WEIGHT
6	CSG6-RP	7	6	5	7	16 ¼	8	59
9	CSG9-RP	10	8	7 ⅛	9 ½	20 ¾	9 ½	83
10	CSG10-RP	11	9	7 ⅞	10 ⅛	22 ⅝	10 ⅛	95
12	CSG12-RP	13	10 ½	8 ⅞	11 ¼	26 ⅛	11 ⅝	114
14	CSG14-RP	15	11 ½	10 ⅛	12 ½	29 ⅛	12 ⅝	137
16	CSG16-RP	17	13 ½	11 ⅛	13 ½	32 ⅛	13 ⅝	150
18	CSG18-RP	19	14 ½	12 ⅜	14 ¾	35 ⅝	15 ⅛	178
20	CSG20-RP	21	15 ½	13 ⅜	15 ¾	38 ⅝	16 ⅛	200
24	CSG24-RP	25	17 ½	15 ⅜	17 ¾	44 ⅝	18 ⅛	238
30	CSG30-RP	31	21	18 ⅜	21 11/16	54 3/16	22	445
36	CSG36-RP	37	25	23	26 13/16	64	25 3/16	570

ELECTRIC, CURVED

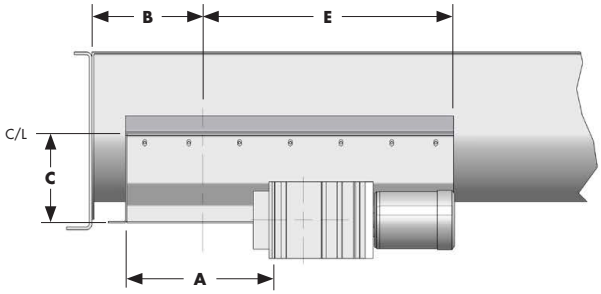

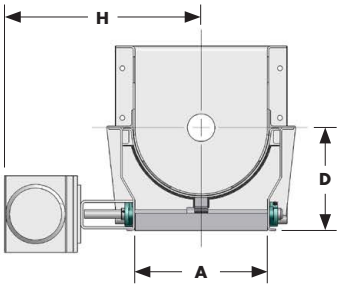

SIZE	PART #	A	B (MIN)	C	D	E	H	WEIGHT
12	CSG12-E	13	10 ½	8 ⅞	11 ¼	26 ⅛	19 ⅞	226
14	CSG14-E	15	11 ½	10 ⅛	12 ½	29 ⅛	21 ⅝	249
16	CSG16-E	17	13 ½	11 ⅛	13 ½	32 ⅛	23 5/16	262
18	CSG18-E	19	14 ½	12 ⅜	14 ¾	35 ⅝	23 9/16	290
20	CSG20-E	21	15 ½	13 ⅜	15 ¾	38 ⅝	23 13/16	312
24	CSG24-E	25	17 ½	15 ⅜	17 ¾	44 ⅝	25 ⅞	350
30	CSG30-E	31	21	18 ⅜	21 11/16	54 3/16	31 5/16	557
36	CSG36-E	37	25	23	26 13/16	64	31 ⅞	682

Dimensions on gates are subject to change and will vary according to actuation methods. Dimensions shown for general reference only.
Contact Conveyor Eng. & Mfg. for precise measurements.

PHONE 319.364.5600 | 800.452.4027 **FAX** 319.364.6449

INCLINED & VERTICAL SCREW CONVEYORS

INCLINED SCREW CONVEYORS

Products can be conveyed and elevated at the same time by mounting a screw conveyor at an incline. This is often desirable because it covers two operations with one piece of equipment therefore saving space and reducing downtime, maintenance cost, etc. A standard screw conveyor will often operate normally at angles up to 15º with only a small loss in capacity. Beyond that, adjustments and/or modifications are typically necessary. The design is a bit involved and these items should be taken into consideration:

- More horsepower is required for Inclined Screw Conveyors: This is due to both lifting the product and "reconveying" product that falls back.
- Hangers should be eliminated: They create a "dead flow" area that is emphasized with inclined conveyors. This often results in the use of longer screws which require their own design considerations.

Other modifications that Conveyor Eng. & Mfg. often applies based on the situation:

- Tighter clearance between the screw and trough: This is especially necessary with granular, free flowing products such as dry, refined sugar.
- Higher screw speed: This increases the product's forward momentum and reduces fallback.
- Shorter pitch screw flighting: This improves the relative angle between the flights and the conveyed product.
- Use of tubular trough or shrouds: Both act in the same way to surround the screw and prevent product from falling back over the top which tends to occur more as speed is increased.

There are many variables involved including product particle size & shape, moisture content, etc. so past experience is often crucial to designing an efficient Inclined Screw Conveyor. Consult Conveyor Eng. & Mfg. for help with your design.

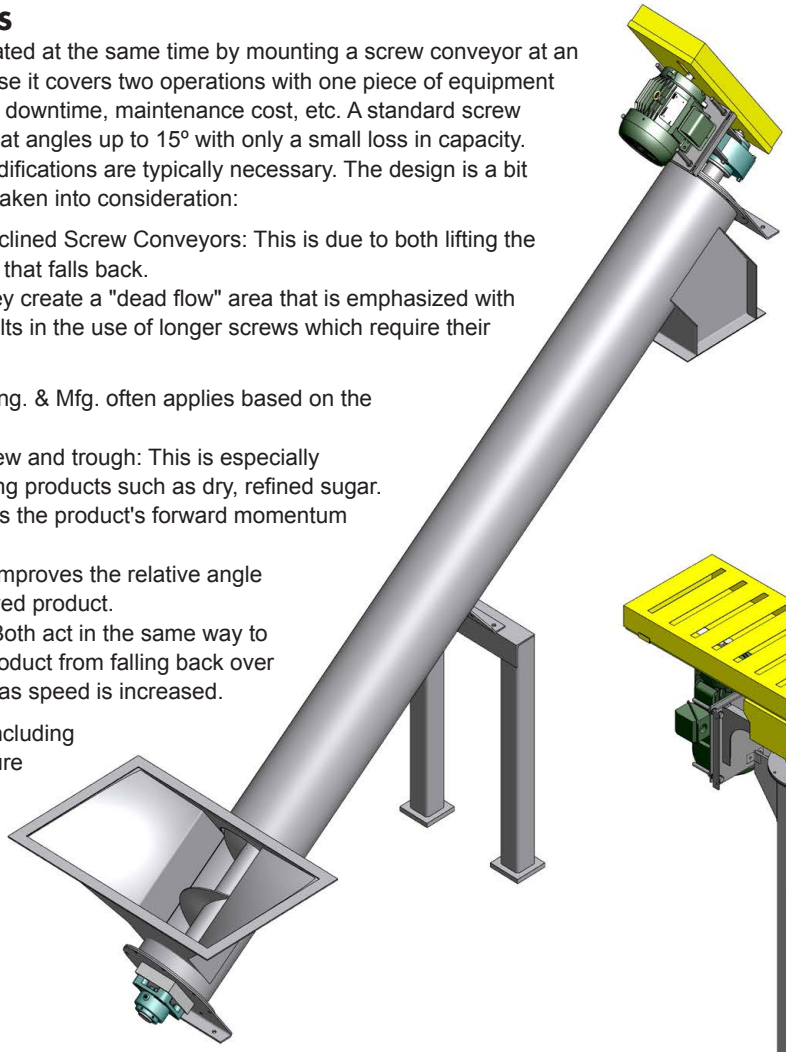

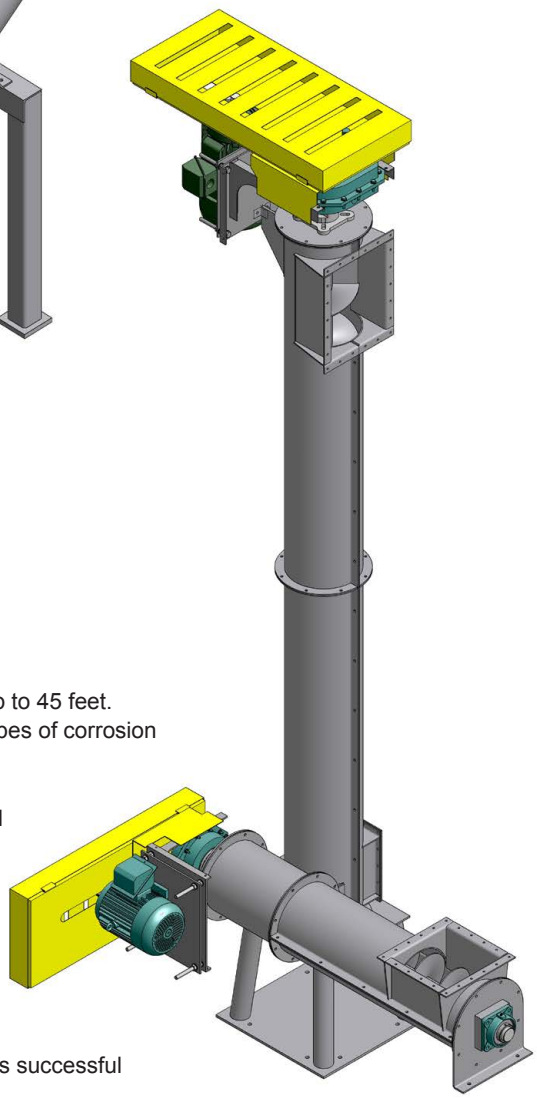

VERTICAL SCREW CONVEYORS

Vertical screw conveyors offer many advantages over other options:

- They convey a wide variety of materials very efficiently.
- They occupy a small footprint.
- They actually have very few moving parts so reliability is high.
- We have built Vertical Conveyors that have reliably elevated products to heights up to 45 feet.
- Construction is available in many materials including stainless steel and various types of corrosion resistant alloys as well as carbon steel and abrasion resistant materials.
- Shaftless Vertical Screw Conveyors are available for sticky materials.
- As with all bulk material handling equipment Conveyor Eng. & Mfg. makes, Vertical Screw Conveyors can be custom made to fit your needs.
- Vertical Screw Conveyors are a good fit for many industries including Chemical, Grain, Food, Mining, Pulp & Paper, etc.
- The housings are fully enclosed keeping contamination potential very low. Fully dust and vapor tight designs are available.

In most cases Conveyor Eng. & Mfg. offers free, full scale, actual product testing of custom Vertical Screw Conveyors. You can ship us a bulk bag of your product and we will run a series of tests on your conveyor prior to shipping it. This guarantees successful operation and desired product flow.

SCREW FEEDERS / LIVE BOTTOMS

Screw Feeders are used to control the feed rate of free flowing, bulk material from a bin or hopper. The inlet section of the trough is designed to be flooded (100% full). A shroud (curved cover) or tubular trough helps restrict the flooded area to only the inlet section. The screw under the inlet, and sometimes the trough as well, are modified to convey a metered amount of material per revolution of the screw. Modifications may include changes in the flighting diameter, pitch, pipe diameter, trough shape, etc.

Screws with uniform diameter and pitch will convey material from the rear of the inlet opening first. This can create flow issues with some materials because only a portion of the inlet is actually used so the bin or hopper doesn't discharge evenly. Pockets of material don't move and may clump, degrade over time, etc. The answer to this problem is to use the screw and trough modifications to create "Mass Flow" which means to draw material evenly across the full length of the inlet. This requires a screw with variable pitch flighting, tapered diameter and/or cone shaped pipe.

SCREW DIA.	FT^3/HR per RPM*
6	4.7
9	17.6
12	42.0
14	68.0
16	101
18	145
20	196
24	346
30	665
36	1,139

*Single screw feeders w/full pitch flighting & std. pipe under shroud side of inlet as shown below

SINGLE SCREW FEEDERS

Variable Pitch

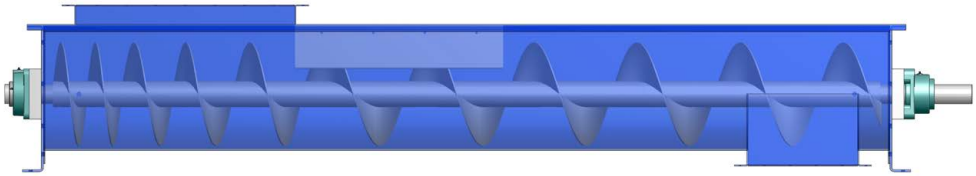

Tapered Diameter

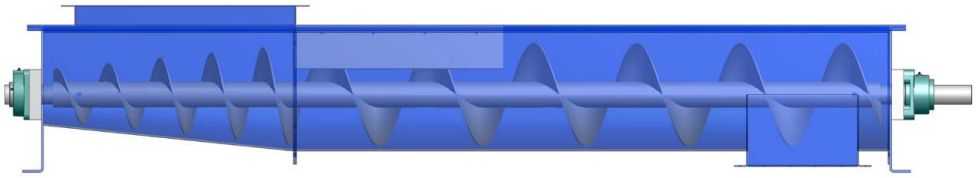

Cone Screw

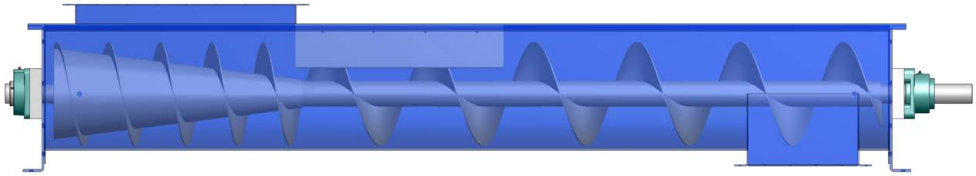

TWIN SCREW FEEDERS

All of the single screw variations are also available as twins. This increases capacity while allowing for wider inlets and discharges which often improves performance for less free flowing materials.

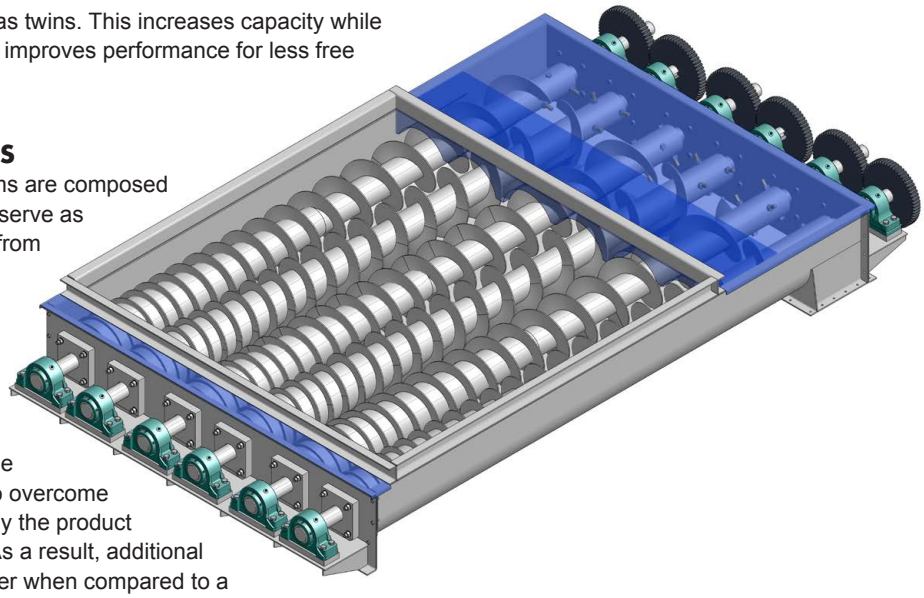

MULTIPLE SCREW FEEDERS / LIVE BOTTOMS

Designed for use on straight sided bins, Live Bottoms are composed of a number of feeder screws working in tandem to serve as the bottom of the bin. Material is drawn out equally from the full length and width of the bin. The Live Bottom Feeder is used to its best advantage with materials that tend to pack or bridge.

FEEDER DESIGN

Screw feeders are designed to operate under flooded conditions with a head load of product on the screw or multiple screws. They must be designed to overcome a static condition and the downward force exerted by the product head load which also creates frictional resistance. As a result, additional torque is required to start and operate a screw feeder when compared to a standard screw conveyor and the starting torque requirements can be as much as 2-1/2 times the running torque. Most screw feeders for industrial applications operate at speeds below 30 rpm resulting in higher torque at the drive shaft. For these reasons, special consideration is required during the design process and past experience is often crucial. Consult Conveyor Eng. & Mfg. for help with your design.

PHONE 319.364.5600 | 800.452.4027 **FAX** 319.364.6449

ENGINEERED PRODUCTS

PLUG SCREWS

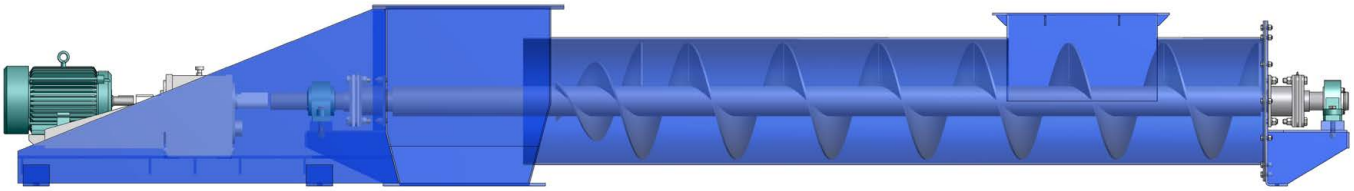

CUSTOM SLIDE GATES

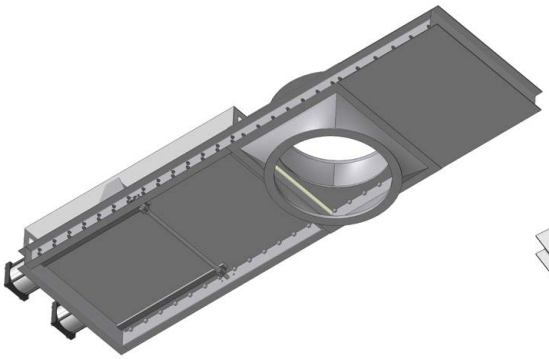

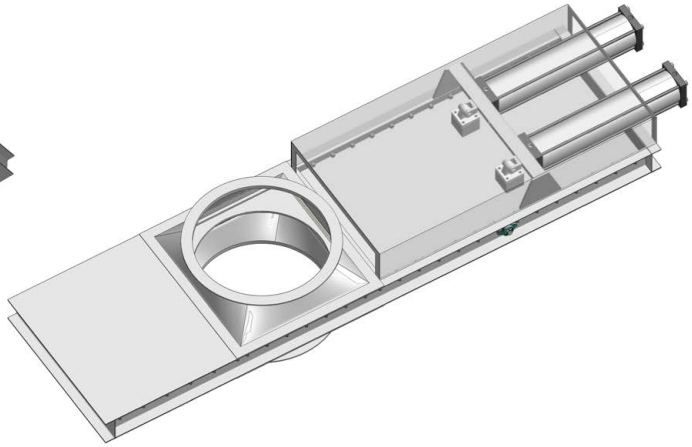

LOAD-OUT SYSTEMS

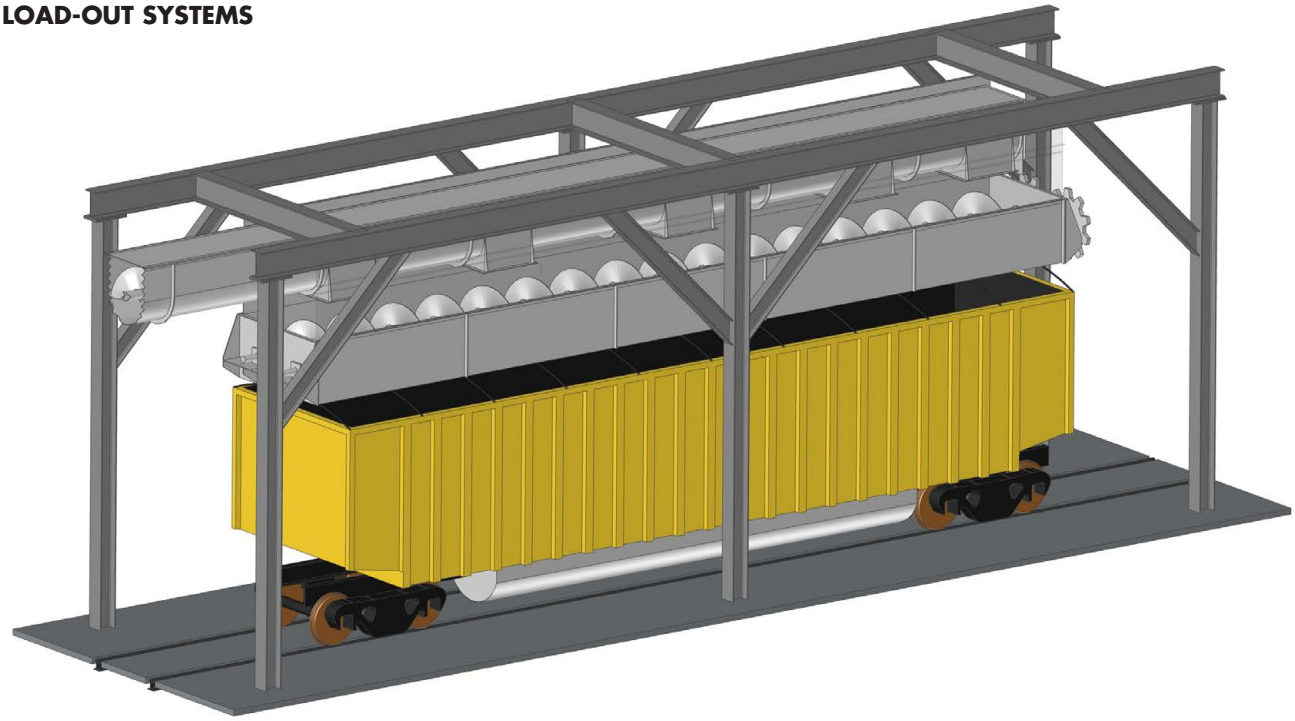

ENGINEERED PRODUCTS

SCREW PRESSES

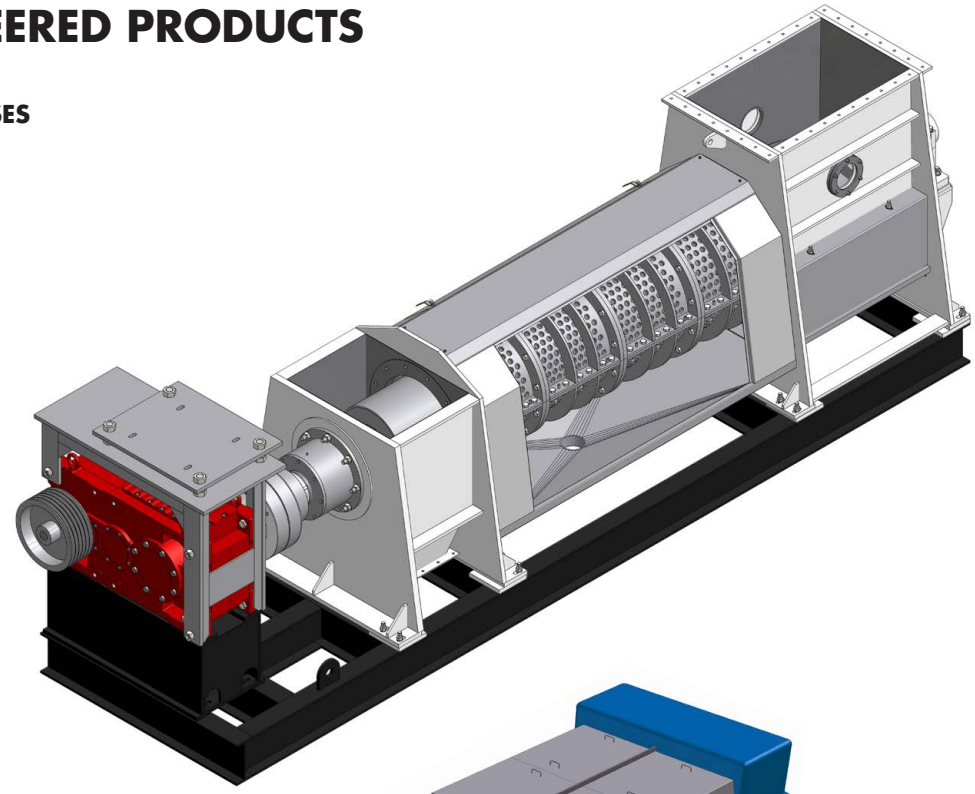

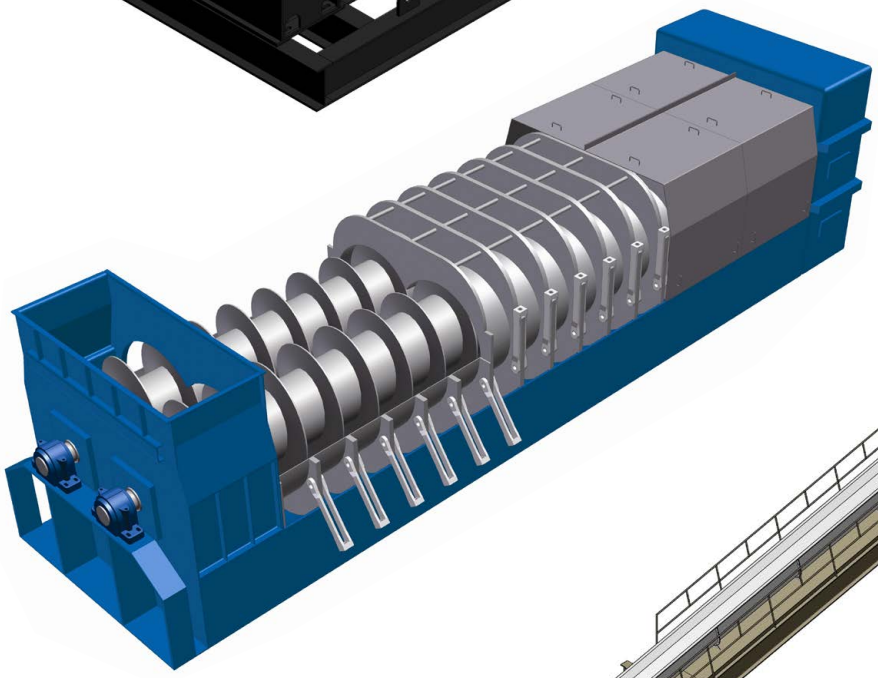

STRUCTURAL STEEL/SUPPORTS

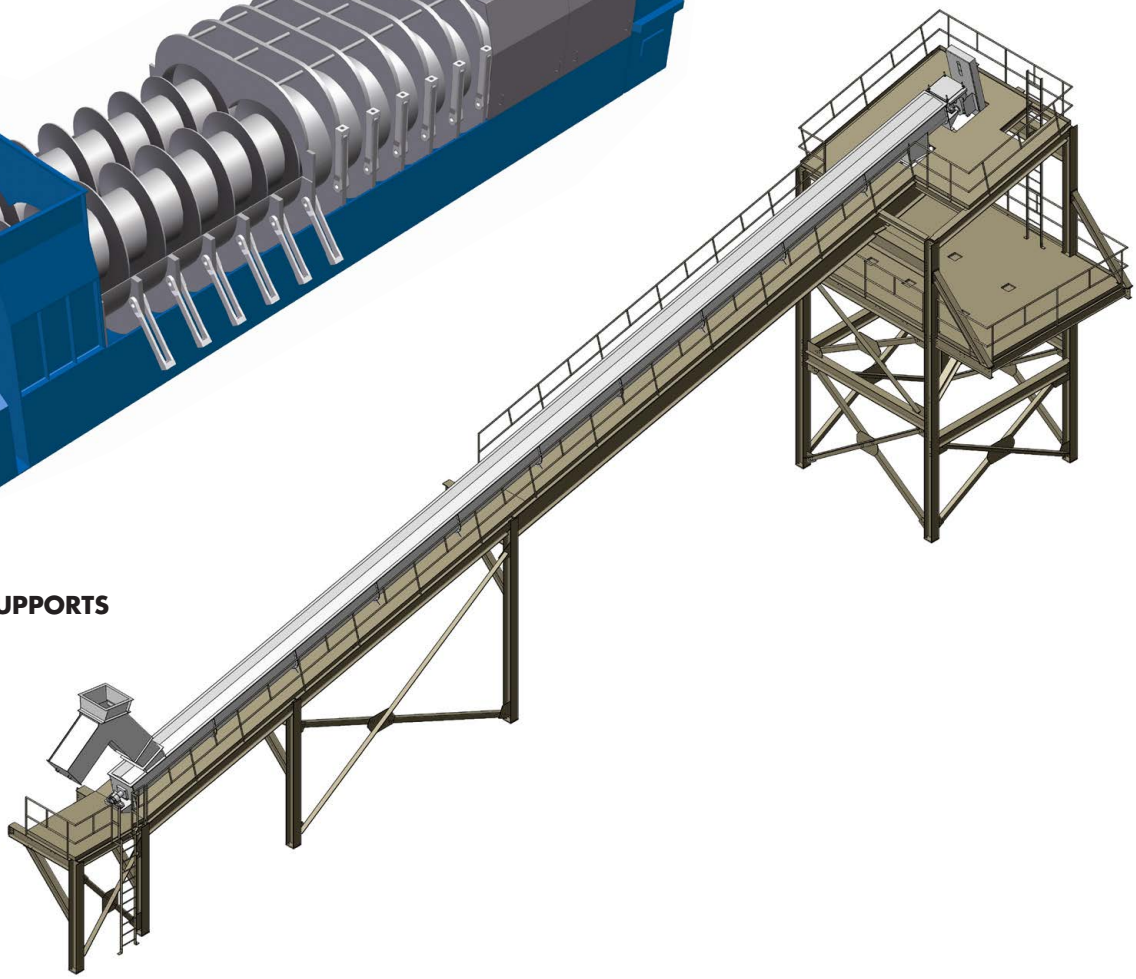

PHONE 319.364.5600 | 800.452.4027 **FAX** 319.364.6449

ENGINEERED PRODUCTS

MIXERS

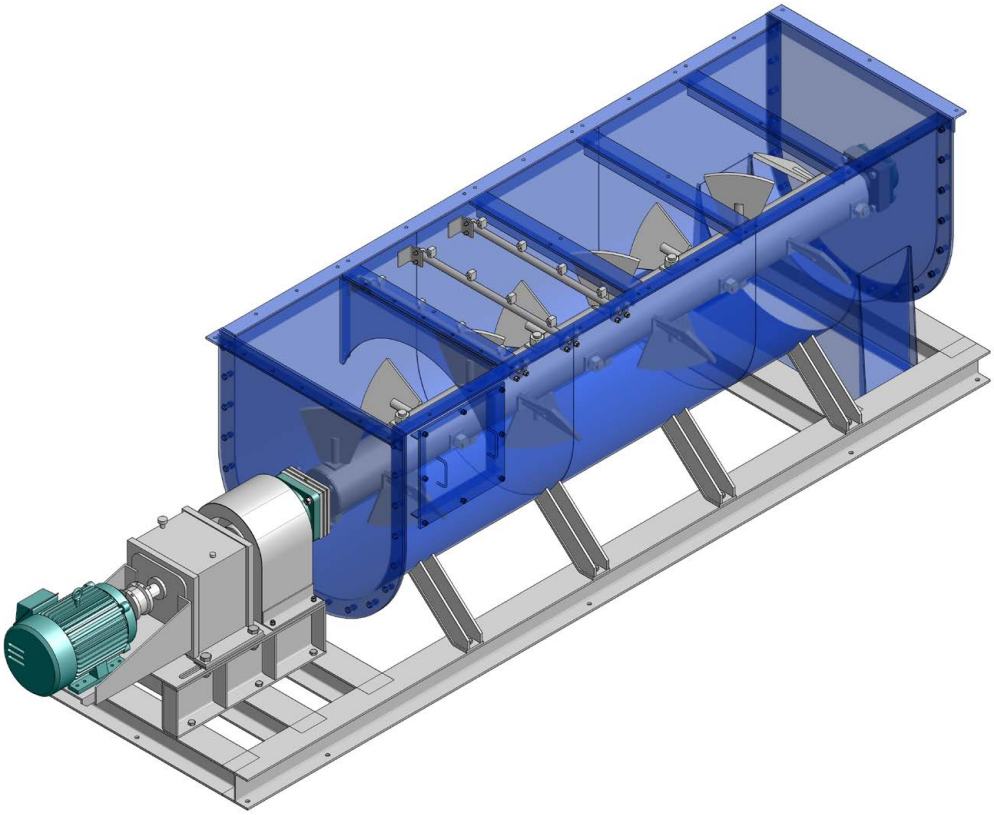

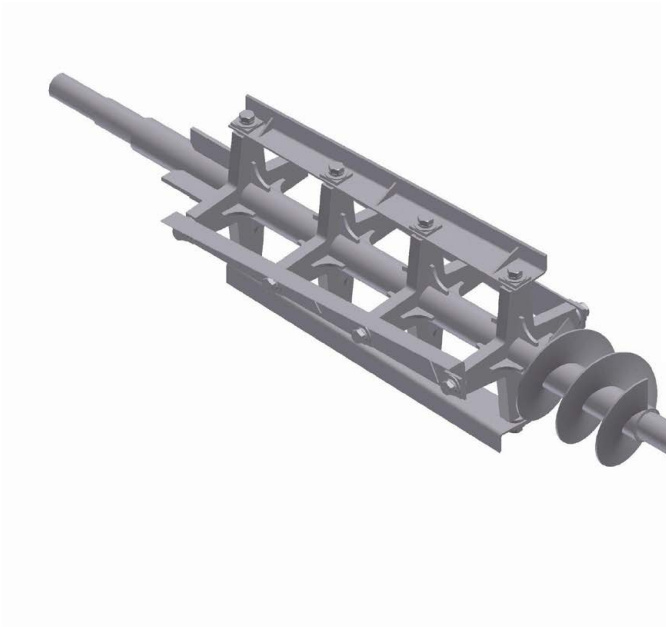

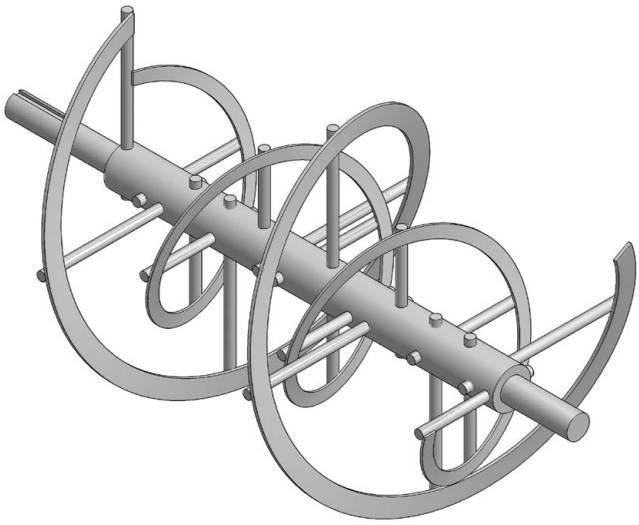

ENGINEERED PRODUCTS

OTHER

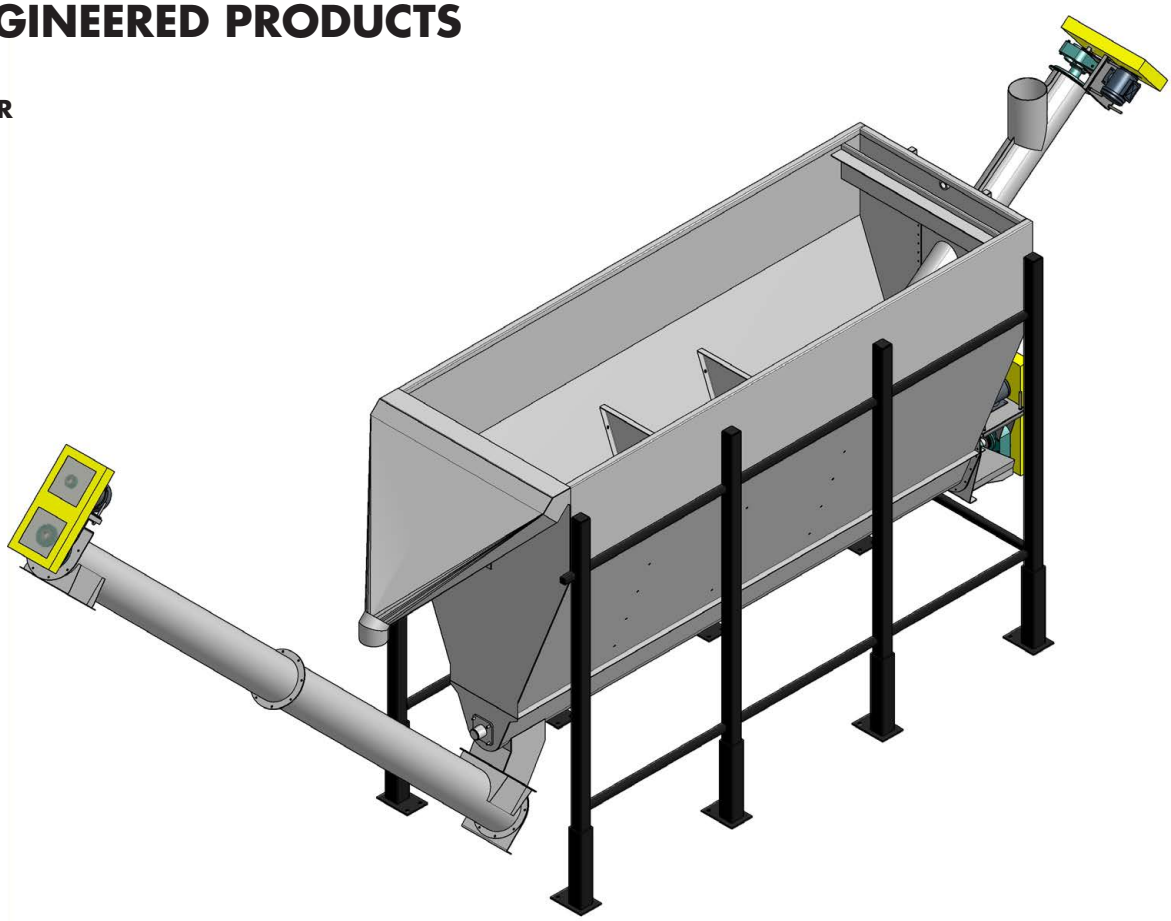

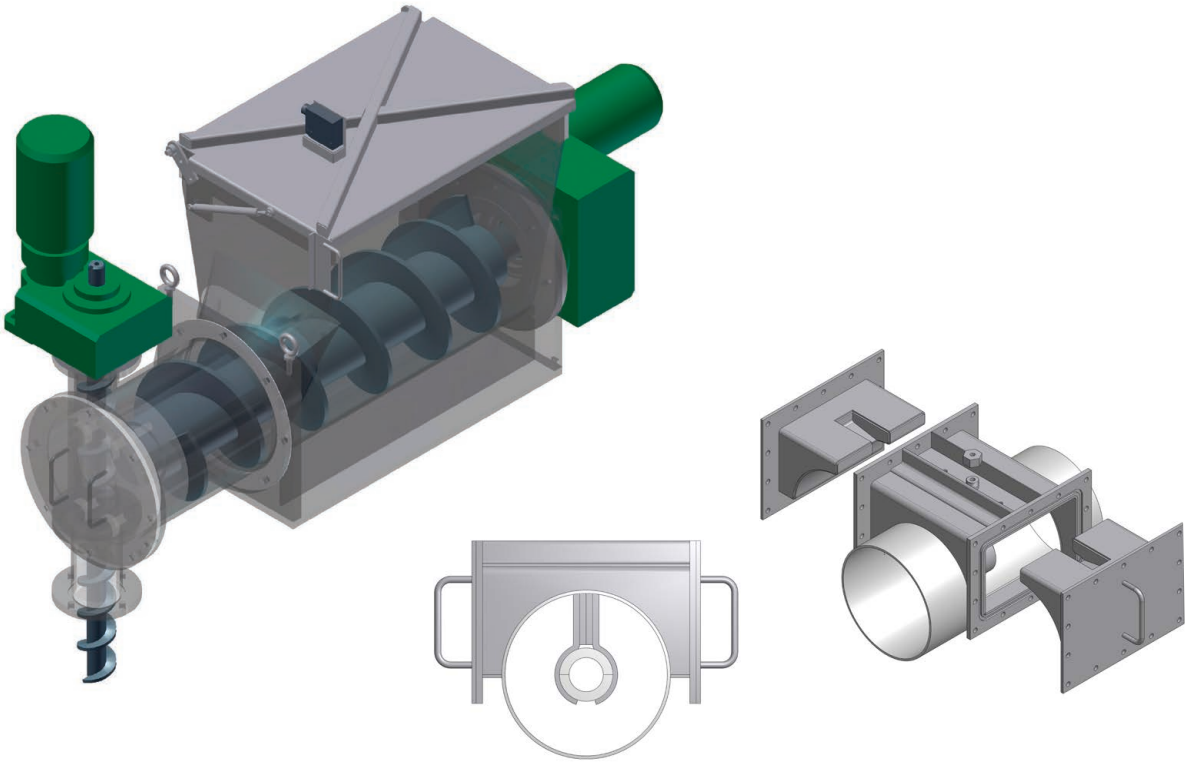

PHONE 319.364.5600 | 800.452.4027 **FAX** 319.364.6449

SAFETY

GENERAL SAFETY

It is the responsibility of the contractor, installer, owner, and user to install, maintain, and operate the conveyor components and assemblies manufactured and supplied by Conveyor Engineering & Manufacturing Company (CEMC) in such a manner as to comply with the following:

- Williams-Steiger Occupational Safety and Health Act (OSHA)
- American National Standards Institute (ANSI) Safety Code
- All state and local laws and ordinances

MINIMUM PRECAUTIONS

In order to avoid an unsafe or hazardous condition, the conveyor assemblies and components must be installed with the following minimum conditions:

1. Screw conveyors shall not be operated unless the conveyor housing completely encloses the conveyor's moving elements and the power transmission guards are in place. Prior to opening the conveyor for inspection, cleaning, or observation, the motor driving the conveyor shall be locked out electrically in such a manner that it cannot be restarted by anyone, however remote from the area. Only after the conveyor housing has been closed and all other guards are in place shall operation of the equipment commence.

2. Inlet and discharge openings shall be connected to other equipment in order to completely enclose the conveyor. If the conveyor must have an open housing as a condition of its use and application, the entire conveyor shall be guarded by a railing or fence.

3. Gratings shall cover all exposed loading and/or feed openings. The grating opening size must not exceed ½" x 2" if the screw is less than 4" from possible bodily or clothing contact. If the nature of the material prohibits the use of grating, railing shall guard the exposed section of conveyor and warning signs shall be posted.

4. The conveyor shall have solid covers for areas not used for loading, feeding, or discharging.

5. Do not step or walk on conveyor covers, grating, or power transmission guards.

6. Do not poke or prod the material in the conveyor. Do not place hands, feet, any part of the body, or any article of clothing in the conveyor or opening.

7. Do not overload the conveyor or attempt to use it for purposes other than it's intended use.

8. Practice good housekeeping by removing any debris or unnecessary items found on or around the conveyor. Maintain adequate lighting around the conveyor.

SAFETY DEVICES

CEMC can assist in the selection of electrical control devices that will provide an extra measure of safety for the conveying operation. The purchaser must select equipment and devices that conform to the National Electrical Code, the National Electrical Safety Code, and all local and national codes. Consideration should be given to one or all of the following devices and to others that may be appropriate.

- Overflow lids, consisting of a hinged cover (over the discharge area) and a limit switch, can be used to shut off power if the conveyor becomes plugged or overfilled.

- Zero speed and pull cord switches can be used to shut off power if the conveyor unexpectedly stops.

- Electrical interlocking devices can be used to shut down feeding conveyors whenever a receiving conveyor stops.

- Special motor enclosures can be used to withstand various atmospheric conditions (explosion proof, dust-ignition-proof, chemical-duty, sanitary-duty, etc.).

WARNING LABELS

All screw conveyors supplied by CEMC shall have one or more of the following decals affixed to the trough in visible locations. Additional decals are available upon request.

CONVEYOR INSTALLATION

Screw conveyors may be ordered either as complete units or as individual components. Complete units are shop assembled, aligned, and match marked, then disassembled for shipment. This procedure results in significantly lower field installation time. Individual components must be sorted out and aligned in field assembly, resulting in longer installation time. Individual components, unless specified otherwise, do not include assembly hardware. **Receiving**: Upon delivery, check shipping documentation to verify that all items were received. Immediately inspect all components for damage. Minor damage incurred in shipping (dented trough, bent flanges, etc.) can be readily repaired in the field. If shipment is severely damaged, file a claim with the carrier immediately.

ASSEMBLY

1. The mounting surface for supporting the conveyor must be level and true to avoid distortion in the conveyor. If anchor bolts are not in line, either move them or slot the conveyor feet or saddle holes. Use shims under feet as required to achieve correct alignment. Do not proceed with installation of shafts and screws until trough has been completely aligned and bolted down.

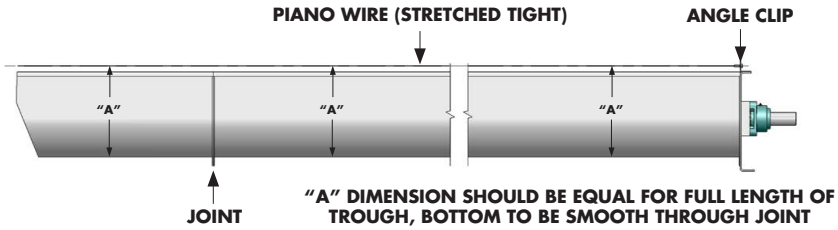

2. Arrange troughs and trough ends in proper sequence as match marked or per applicable drawing. Hand tighten bolts.
3. Align the inside trough bottom centerlines with piano wire (or equivalent) and tighten trough and anchor bolts.
4. Begin assembly of screw sections at the thrust end (the discharge and/or drive end). Insert the drive shaft in the bearing. Do not tighten bearing set screws until conveyor assembly is complete.

WARNING: Do not over tighten coupling bolts
(see torque specs on next page)

5. Place the first screw section in the trough. Install all screw sections such that the flight lugs, if present, are opposite the carrying side of the flighting. Slide the drive shaft into the screw section and secure tightly with coupling bolts.

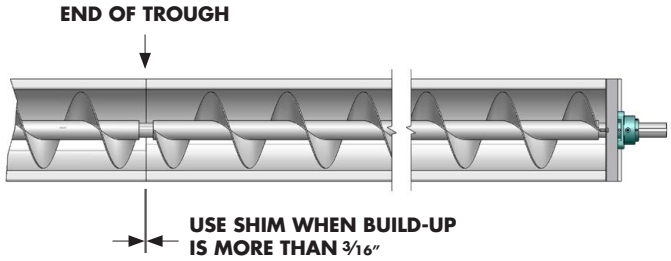

6. Insert the coupling shaft in the other end of the screw and secure tightly with coupling bolts.
7. If using hangers, slide the hanger assembly over the end of the coupling shaft. Secure the hanger to the trough with mounting bolts hand tight.
8. Insert a coupling shaft into the next screw section and secure tightly with coupling bolts. Place screw in trough so that there is approximately 180° between flighting ends of mating screw sections. Slide screw section over the end of coupling shaft of the previous screw section. Secure tightly with coupling bolts.
9. Slide the next hanger assembly over the coupling shaft. Secure hanger to trough with mounting bolts hand tight.
10. Return to the previous hanger assembly. Center the hanger bearing between the screw section pipe ends. Tighten hanger mounting bolts.
11. Turn screw section by hand to check alignment. If screw does not turn freely, adjust hanger mounting accordingly.
12. Install all of the screw sections (except the last one) by repeating steps 8 thru 11.
13. Slide tail shaft through the end bearing and into the last screw section. Secure tail shaft tightly to last screw section with coupling bolts.
14. If trough end seals are used, be sure that the shafts are centered within the seal openings.
15. Turn entire screw assembly by hand to check alignment. If binding occurs, loosen and realign hanger bearings accordingly.
16. Tighten bearing set screws at both ends.
17. Make a final check of all bolts to ensure they are tight.
18. Remove any debris from trough (hardware, tools, etc.). Install covers and safety guards in proper sequence as match marked or per drawing.

SCREW CONVEYOR COUPLING WITH HANGER

FLIGHTING ENDS APPROXIMATELY 180° APART

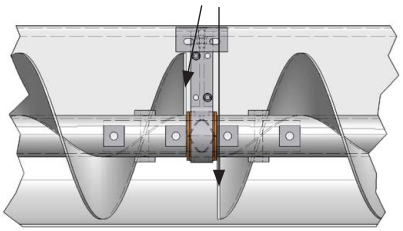

CLOSE COUPLED SCREW CONVEYOR

FLIGHTING ENDS ALIGN TO PRODUCE CONTINUOUS CARRYING SURFACE

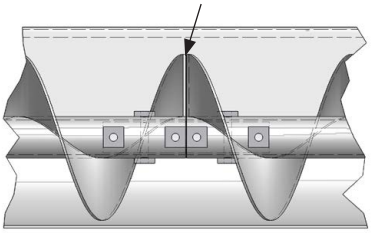

PHONE 319.364.5600 | 800.452.4027 **FAX** 319.364.6449

CONVEYOR MAINTENANCE

General Inspection
Establish routine periodic inspection of the entire conveyor to insure continuous maximum operating performance. Keep the area around the conveyor and its drive clean and free of obstacles to provide easy access and avoid functional interference of components.

Power Lock Out
Lock out power to the motor before attempting any maintenance. Use a padlock and tag on the drive's controls. Do not remove padlock or tag, nor operate conveyor, until all covers and guards are securely in place.

Removing Screw Sections
When necessary, screw sections are typically removed starting with the end opposite the drive. Remove trough end, screw sections, coupling shafts, and hangers until damaged or worn section is removed. Reassemble conveyor in reverse order.

Coupling Bolts
Periodically remove and inspect one of the drive shaft coupling bolts for damage or wear. Also inspect the coupling bolt hole. The drive shaft coupling bolts transmit more power than successive coupling bolts and will typically indicate the greatest wear. An accurate torque wrench should always be used when tightening coupling bolts. Excessive torque will stretch/neck the bolt and significantly compromise its strength. See chart and notes below.

Lubrication
Lubricate end bearings, hanger bearings and drive components at the frequency and quantity specified by the individual component's manufacturer. Most types of hanger bearings require lubrication and wear is reduced significantly with a frequent lubrication schedule. Frequency of schedule depends on many variables (temperature, type of bearing, type of lubrication, product conveyed, trough load, screw weight, etc.)

Screw Bushings/Internal Collars
The bushings at each end of a screw will wear over time. Depending on shaft size, etc., screws generally ship with a shaft to bushing clearance of 0.012" which allows for thermal expansion, etc. When possible, check for excessive shaft movement that indicates bushings need to be replaced. Longer and heavier screws typically have greater bushing wear.

SCREW SHAFT SIZE	UNC BOLT SIZE	MAX TORQUE* (FT-LB) 316SS BOLTS	MAX TORQUE* (FT-LB) GRADE 5 CS BOLTS
1 ½	½" - 13	45	75
2	⅝" - 11	95	150
2 7/16	⅝" - 11	95	150
3	¾" - 10	130	260
3 7/16	⅞" - 9	200	430
3 15/16	1 ⅛" - 7	430	790
4 7/16	1 ¼" - 7	545	1120
4 15/16	1 ½" - 6	930	1950
5 7/16	1 ¾" - 5	1050	2200

* Torque values are based on non lubricated installation. Reduce torque by 20% for lubricated fasteners.
* Plated fasteners are considered lubricated.
* Anti-Seize is recommended with SS bolts to reduce galling and allow for reuse but torque max is reduced by 30%

IMPORTANT: Various conditions can require torque values differing from those shown in the chart. Also keep in mind that these are max torque limits. Coupling bolts are typically only loaded in shear so tightening to lower torque values should extend bolt life and reduce the likelihood of failure.

***Do not attempt to use hex bolts in place of coupling bolts**. Coupling bolts have longer, unthreaded shanks necessary for shear strength which is typically the limiting design factor. Example: When its threads extend into the shear plane between the shaft and internal collar, the shear strength of a 3/4" standard hex bolt is only 73% that of a 3/4" coupling bolt.*

CONVEYOR
ENGINEERING & MANUFACTURING

1345 76th Ave SW Cedar Rapids, IA 52404
P: 319.364.5600 / F: 319.364.6449
sales@conveyoreng.com
www.conveyoreng.com

Date: _____

Customer: _____ Location: _____

Contact name: _____

Phone: _____ Fax: _____

Email: _____

SCREW CONVEYOR SPEC SHEET

GENERAL INFORMATION

Conveyor Name / #: _____

Product to be conveyed: _____ **Lbs/cubic ft:** _____ **Temp:** _____

Capacity desired/hour: _____ **Feed:** ☐ Metered ☐ Unmetered (hopper feed)

Conveyor length: _____ ☐ Overall length ☐ Center to center **Angle of incline (horiz. = 0):** _____

Material of construction: ☐ 304SS ☐ 316SS ☐ Carbon steel ☐ _____

# of Inlets: _____ **# of Discharges:** _____ **To ship:** ☐ Assembled ☐ As loose parts

Surface coating/paint? _____

Include drive? ☐ Yes ☐ No **Type:** _____

Component preference: ☐ Light duty ☐ Medium duty ☐ Heavy duty ☐ Extra heavy duty

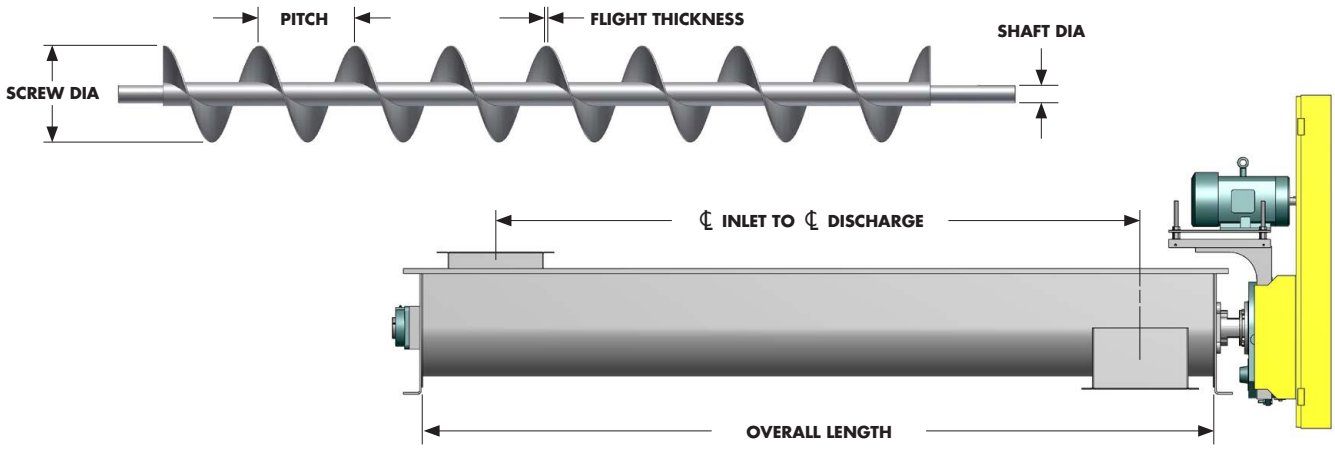

WELD FINISH	INTERIOR	EXTERIOR
Standard clean up	☐	☐
Wire brushed	☐	☐
CEMA III (ground flush, some pits)	☐	☐
CEMA IV (ground flush, no pits)	☐	☐
High polish	☐	☐

OTHER SURFACES	INTERIOR	EXTERIOR
Standard clean up	☐	☐
Sheet finish (protected while forming)	☐	☐
Bead blast	☐	☐
120 grit	☐	☐
180 grit and uniform grain	☐	☐
High polish	☐	☐

NOTE: The information above is all that is required if you would like Conveyor Engineering to calculate component sizes, HP, etc. Continue on to next page if you'd like to specify more detailed information.

SCREW CONVEYOR SPEC SHEET *(continued, optional)*

SCREWS

Diameter: _____ **Length(s):** ☐ Std ☐ Other: _____

Bare pipe (typical over discharge): ☐ Yes ☐ No ☐ Length & location: _____

Flighting material: ☐ 304SS ☐ 316SS ☐ c.s. ☐ _____

Pipe material: ☐ 304SS ☐ 316SS ☐ c.s. ☐ Clad pipe (carbon steel clad w/ stainless) ☐ _____

Pipe schedule: ☐ 40 ☐ 80 ☐ 80/10 clad pipe ☐ _____ **Nom. pipe size:** _____

Shaft size: _____ **Shaft drilling:** ☐ 2-bolt ☐ 3-bolt ☐ Shafts welded in

Flighting thickness: _____ **Pitch(es):** _____ **Bolt pads:** ☐ Yes ☐ No

Welds: ☐ Stitch* ☐ Cont. weld one side ☐ Cont. weld both sides ☐ Smooth heliarc both sides (TIG)

Special: ☐ Metering screw ☐ Paddles ☐ Cut flts. ☐ Cut & folded flts. ☐ Ribbon ☐ Hardsurfaced ☐ Close coupled

Details: _____

SHAFTS

Material: ☐ 304SS ☐ 316SS ☐ 1018/1045 c.s. ☐ 4140 c.s. ☐ 1144 Stressproof ☐ _____

Diameter: ☐ 1" ☐ 1½" ☐ 2" ☐ 2 7/16" ☐ 3" ☐ 3 7/16" ☐ 3 15/16" ☐ 4 7/16" ☐ 4 15/16" ☐ _____

Snap rings on drive shaft: ☐ Yes ☐ No* **Tail shaft drilled & tapped for speed sensor:** ☐ Yes ☐ No*

TROUGHS

Type: ☐ "U"* ☐ Tube ☐ Flared ☐ Other: _____ **Length(s):** ☐ Std ☐ Other: _____

Material: ☐ 304SS ☐ 316SS ☐ c.s. ☐ _____ **Thickness:** _____

Gasketing at end flanges? ☐ No, Silicone caulk only* ☐ Yes, type: _____

COVERS

Type: ☐ Flanged* ☐ Flat ☐ Hip-roof (ridged) ☐ Semi-flanged **Thickness:** _____

Material: ☐ 304SS ☐ 316SS ☐ c.s. ☐ _____ **Sealed with gaskets?** ☐ Yes ☐ No*

Length(s): ☐ Std ☐ Other: _____ **Cover Clamps:** ☐ "C"* ☐ Spring ☐ Toggle ☐ Cvrs bolted to trough

Special requirements? _____

HANGERS

Type: ☐ Quick-Change (QCCH) ☐ Heavy-Duty (HDCH) **Top plate style:** ☐ "226"* ☐ "220" ☐ Other: ____

Material: ☐ 304SS ☐ 316SS ☐ Carbon Steel ☐ _____

Hgr. bearing: ☐ Plastic resin ☐ Bronze ☐ Bronze w/graphite ☐ Hard iron ☐ Ceramic ☐ Other: _____

Food grade: ☐ Yes ☐ No* **Grease tube required:** ☐ Yes ☐ No*

END BEARINGS

Type: ☐ 4-bolt flange* ☐ Pillow block (requires pedestal end pate) **Brand/Model:** _____

SEALS

Type: ☐ Plate w/lip* ☐ Grease purge* ☐ Waste packing w/lip ☐ Packing gland (req's pedestal end plate) ☐ Air purge
☐ Split gland ☐ Other: _____

Housing material: ☐ 304SS ☐ 316SS ☐ Carbon steel* ☐ _____

DRIVE

Location: ☐ Inlet end ☐ Discharge end* **Type:** ☐ Screw drive ☐ Shaft mount ☐ Direct cpld ☐ Helical w/ sprockets

HP: _____ **Final RPM:** _____ **Voltage:** _____ **Motor:** _____ **Reducer:** _____

**denotes standard*

CONVEYOR ENGINEERING & MANUFACTURING

ENGINEERING REFERENCE DATA

MISCELLANEOUS FORMULAS & CONVERSIONS

VOLUME		
TO CONVERT	**TO**	**MULTIPLY BY**
cubic centimeters	cubic inches	0.061024
cubic inches	cubic centimeters	16.387
liters	cubic feet	0.0353
cubic feet	liters	28.317
cubic feet	cubic inches	1728
cubic feet	bushels	0.8035
bushels	cubic feet	1.2445
liters	gallons (US)	0.2642
gallons (US)	liters	3.785
cubic inches	gallons (US)	0.00433
gallons (U.S.)	cubic inches	231
cubic feet	gallons (US)	7.481
gallons (U.)	cubic feet	0.1337
cubic yard	cubic feet	27
cubic feet	cubic yard	0.03704

WEIGHT		
TO CONVERT	**TO**	**MULTIPLY BY**
kilogram	lbs	2.2046
lbs	kilogram	0.4536
short ton	lbs	2000
long ton	lbs	2240
metric ton	lbs	2204.6

LINEAR		
TO CONVERT	**TO**	**MULTIPLY BY**
inches	millimeters	25.4
millimeters	inches	0.03937
meters	inches	39.37
inches	meters	0.0254
meters	feet	3.2808
feet	meters	0.3048

POWER		
TO CONVERT	**TO**	**MULTIPLY BY**
KW (electric)	HP	1.34102
KW (metric)	HP	1.35962
HP	KW (electric)	0.7457
HP	KW (metric)	0.7355
HP	ft lb/sec	550

PHONE 319.364.5600 | 800.452.4027 **FAX** 319.364.6449

ENGINEERING REFERENCE DATA

MISCELLANEOUS FORMULAS & CONVERSIONS

WATER

weight (lbs.) = cubic feet x 62.4
weight (lbs.) = gallons (US) x 8.337
PSIG = head (inches) x 0.03609
PSIG = head (feet) x 0.4331

TEMPERATURE

degrees Celsius = 5/9 x (F - 32)
degrees Fahrenheit = 9/5 x C + 32

HORSEPOWER AND TORQUE

Torque (inch-lbs.) = 63025 x HP / RPM
HP = Torque (inch lbs.) x RPM / 63025

DRIVE BELT LENGTH (APPROX)

Belt length = $2C + 1.57 \times (D + d) + (D - d)^2 / (4C)$

where C = center distance of sheaves
D = dia of large sheave
d = dia of small sheave

MOTOR FULL LOAD AMPS

HP	230V	460V
1	2.8	1.4
1.5	4.4	2.2
2	5.6	2.8
3	7.6	3.8
5	12.6	6.3
7.5	18.6	9.3
10	24	12
15	37	18.5
20	50	25
25	60	30
30	72	36
40	98	49
50	120	60
60	142	71
75	178	89
100	238	119
125	290	145

* Based on Prem. Effic. TEFC Toshiba EQPIII motors
* Rule of thumb: 460v FLA ≈ 1.25 x HP…230v FLA ≈ 2.5 x HP

VOLUME OF COMMON HOPPER SHAPES

CONE

Volume = $0.2618 \times h \times (D^2 + (D \times d) + d^2)$

where h = height of frustum
D = dia at large end
d = dia at small end

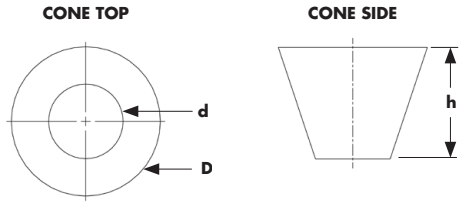

PYRAMID

Volume = (h/3) x (AxB + CxD + sq.rt.(AxB + CxD))

where h = height of frustum
A = width of top
B = length of top
C = width of bottom
D = length of bottom

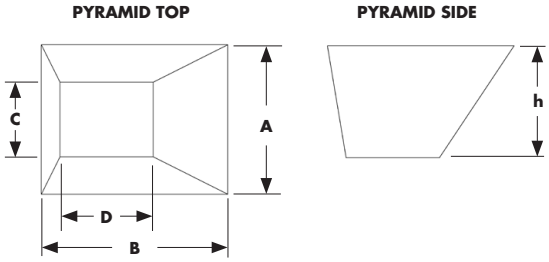

ENGINEERING REFERENCE DATA

PIPE DIMENSIONS AND WEIGHTS

Dimensions listed in inches

PIPE SIZE	PIPE OD	SCHEDULE	PIPE ID	WALL THK	SS LB/FT	CS LB/FT
1 ½"	1.900	10	1.682	0.109	2.135	2.085
		40	1.610	0.145	2.783	2.718
		80	1.500	0.200	3.718	3.631
2"	2.375	10	2.157	0.109	2.701	2.638
		40	2.067	0.154	3.741	3.653
		80	1.939	0.218	5.143	5.022
2 ½"	2.875	10	2.635	0.120	3.616	3.531
		40	2.469	0.203	5.932	5.793
		80	2.323	0.276	7.845	7.661
3"	3.500	10	3.260	0.120	4.436	4.332
		40	3.068	0.216	7.758	7.576
		80	2.900	0.300	10.45	10.25
3 ½"	4.000	10	3.760	0.120	5.092	4.973
		40	3.548	0.226	9.328	9.109
		80	3.364	0.318	12.80	12.50
4"	4.500	10	4.260	0.120	5.748	5.613
		40	4.026	0.237	11.05	10.79
		80	3.826	0.337	15.34	14.98
5"	5.563	10	5.295	0.134	7.957	7.770
		40	5.047	0.258	14.97	14.62
		80	4.813	0.375	21.28	20.78
6"	6.625	10	6.357	0.134	9.51	9.289
		40	6.065	0.280	19.43	18.97
		80	5.761	0.432	29.26	28.57
8"	8.625	10	8.329	0.148	13.72	13.40
		40	7.981	0.322	29.24	28.55
		80	7.625	0.500	44.43	43.39
10"	10.750	10	10.42	0.165	19.15	18.70
		40	10.02	0.365	41.45	40.48
		80S	9.75	0.500	56.06	54.74
12"	12.750	10	12.39	0.180	24.74	24.16
		40	12.00	0.375	50.75	49.56
		80S	11.75	0.500	66.99	65.42
14"	14.000	10	13.50	0.250	37.59	36.71
		40	13.25	0.375	55.88	54.57
		80S	12.50	0.500	73.82	72.09

SHEET & PLATE: THICKNESS, WEIGHT

SHEET/PLATE SIZE	STAINLESS ST. THICKNESS	STAINLESS ST. LB/FT³	CARBON ST. THICKNESS	CARBON ST. LB/FT³
16 ga	.0595"	2.499	.0598	2.500
14 ga	.0751"	3.154	.0747	3.125
12 ga	.1054"	4.427	.1046	4.375
10 ga	.1350"	5.670	.1345	5.625
7 ga	.1874"	7.871	.1793	7.500
3/16"	.1875	8.579	.1875	7.660
1/4"	.250	11.16	.250	10.21
5/16"	.3125	13.75	.3125	12.76
3/8"	.375	16.50	.375	15.32
1/2"	.500	21.66	.500	20.42
5/8"	.625	26.83	.625	25.53
3/4"	.750	32.12	.750	30.63
1"	1.000	42.67	1.000	40.84

PHONE 319.364.5600 | 800.452.4027 **FAX** 319.364.6449

COMPONENT INDEX

COMPONENT PART NUMBER INDEX

COMPONENT	CODE	PG.
Cover Clamp, Screw	CCA-C2	63
Cover Clamp, Spring	CCA-S1	63
Cover Clamp, Spring w/ Brackets	CCA-SB	63
Cover, Standard Flange	CTC...-F	58
Cover, Semi Flange	CTC...-S	58
Cover, Standard Flat	CTC...	58
Cover, Flared Flange	CTC...-VF	58
Cover, Flared Flat	CTC...-V	58
Cover, Hip Roof	CTC...-R	58
Shroud, Bolt-In	CTS...-B	58
Shroud, Flanged	CTS...-F	58
Dam	CTD...	58
Discharge, Standard	CSD...	82
Discharge, Flush End	CSD...-F	82
Discharge, Positive, Wide	CSD...-W	83
Discharge, Positive, Wide and Long	CSD...-WL	83
Discharge, Round	CSD...-T	81
End Bearing, 4-Bolt Flange Mount Ball	F4B-SC...	78
End Bearing, 4-Bolt Flange Mount Roller	F4B-E...	78
End Bearing, 2-Bolt Pillow Block Ball	P2B-SC...	78
End Bearing, 2-Bolt Pillow Block Roller	P2B-E...	78
End Bearing, 4-Bolt Pillow Block Roller	P4B-E...	78
End Bearing, 4-Bolt Flange Spherical	EF4B-S2...	78
End Bearing, 2-Bolt Pillow Block Spherical	P2B-S2...	78
End Bearing, 4-Bolt Pillow Block Spherical	P4B-S2...	78
End Plate for U-Trough w/ Feet	CEF...	53
End Plate for U-Trough w/o Feet	CE...	53
End Plate for U-Trough w/Pedestal Bearing	CEFP...	53
End Plate for Tube Trough w/ Feet	CEFT...	53
End Plate for Tube Trough w/o Feet	CET...	53
End Plate for Tube Trough w/Pedestal Brg.	CEFTP...	53
End Plate for Flared Trough w/ Feet	CEFV...	53
End Plate for Flared Trough w/o Feet	CEV...	53
End Plate for Flared w/Pedestal Bearing	CEFVP...	53
End Flange, U-Trough	CFP...-U	84
End Flange, Tube Trough	CFP...-T	84
End Flange, Flared Trough	CFP...-V	85
Gasket for U-Trough	CFG...-U	84
Gasket for Tube Trough	CFG...-T	84
Gasket for Flared Trough	CFG...-V	85
Hanger Bearing Grease Tube	CHGT...	71
Hanger Bearing, 216/230 Style	CB...	70
Hanger Bearing, 220/226 Style	CBX...	70

COMPONENT	CODE	PG.
Hanger, Quick-Change 226 for U-Trough	QCCH226...	64
Hanger, Heavy-Duty 226 for U-Trough	HDCH226...	64
Hanger, Strong-Arm Quick-Switch 226 for U-Tr.	SACH226...	64
Hanger, Quick-Change 226 for Tube Trough	QCCH226...-T	64
Hanger, Quick-Change 226 for Flared Trough	QCCH226...-V	64
Hanger, Quick-Change 220 for U-Trough	QCCH220...	64
Hanger, Wigid 216 for U-Trough	WGCH216...	64
Hanger, Wigid 230 for U-Trough	WGCH230...	64
Inlet, Standard	CI...	81
Inlet, Round	CI...-T	81
Internal Collar/Bushing (Carbon Steel)	CIC...	71
Internal Collar/Bushing (Stainless Steel)	CICS...	71
Mounting Foot, Flange Foot	CFF...	51
Mounting Foot, Saddle	CS...	51
Shaft Seal, Plate	CSF...	72
Shaft Seal, Guardian™ Grease Purged	GPS...	72
Shaft Seal, Air Purged	CSA...	72
Shaft Seal, Waste Packing	CSW...	72
Shaft Seal, Split Gland	CSS...	72
Shaft Seal, Flanged Gland	FGS...	72
Shaft, Drive	CDS...	42
Shaft, Coupling	CC...	42
Shaft, Close Coupling	CCC...	42
Shaft, End (Tail)	CES...	42
Slide Gate, Pneumatic, Flat	FSG...-P	88
Slide Gate, Rack & Pinion, Flat	FSG...-RP	88
Slide Gate, Electric, Flat	FSG...-E	89
Slide Gate, Pneumatic, Curved	CSG...-P	89
Slide Gate, Rack & Pinion, Curved	CSG...-RP	90
Slide Gate, Electric, Curved	CSG...-E	90
Trough, Formed Flange U-Trough	CTF...	46
Trough, Double Formed Flange U-Tr.	CTDF...	46
Trough, Angle Flange U-Trough	CTA...	46
Trough, Rectangular	CTR...	46
Trough, Flared	CTV...	46
Trough, Tubular (Standard, Full Tube)	CTT...	46
Trough, Tubular (Formed Flange)	CTTF...	46
Trough, Tubular (Angle Flange)	CTTA...	46
Trough, Drop Bottom/Channel	CTDB...	46
Trough, Jacketed	CTJ...	46

INDEX

A

Abrasion/Abrasive Materials 5, 15, 26, 27
Abrasion Resistant Flighting 27
Abrasion Resistant Troughs 27
Abrasion Score 27
Adjustable Paddles 32, 38
Advantages of Screw Conveyors 4
Aerating Materials 5
Agitators 4
Air or Gas Purge Seals 72
Angle Flange Tube Troughs 46, 50
Angle Flange U-Troughs 46, 47

B

Ball Bearings 78, 79
Batching 4
Bearings, End 28, 52, 78
Bearings, Hanger 19, 22, 28, 70
Bearing Stress, Coupling Bolts 24, 41
Belt Length 103
Blending 4
Bolt Pads 24, 28, 32, 41
Bolt Patterns 86, 87
Bolts. *See* Coupling Bolts
Bulk Density 5
Buna-N (Nitrile) Gaskets 85
Bushings/Internal Collars 25, 28, 71

C

Calculating Horsepower 19
Capacity 4, 15, 16, 18, 19, 22, 27, 30, 40, 70, 100
Capacity Factor 16
CEMA 5, 24, 31, 100
Ceramic 8, 27, 70, 101
Channel/Drop Bottom Troughs 46, 49, 63
Clad Pipe 30
Clamps, Cover 28, 63, 101
Classification Codes 5
Class Ratio, Lump Size 18
Close Coupling Shafts 42, 98
Component Code Index 105
Component Groups 23
Component Part Number Index 105
Component Torque limits 25
Cone Screws 33, 92
Contaminable Materials 5, 15
Continuous Weld Both Sides 32
Continuous Weld One Side 32
Controlled Rate of Flow 92
Conversion Formulas 102, 103
Conveyor Capacities 17
Conveyor Layouts 29
Conveyor Size and speed 19
Conveyor Spec Sheet 100, 101
Conveyor Thermal Expansion 15, 26
Corrosive Materials 5, 15, 30
Coupling Bolts 24, 25, 28, 41, 98, 99
Coupling Shafts 28, 42, 44
Cover Clamps 28, 63, 101
Covers 15, 28, 58–63, 85, 97, 101
Cover Thickness 23
Curved Slide Gates 89, 90
Customer References 2
Custom Slide Gates 93
Cut Flights 16, 19, 21, 22, 32, 33, 39, 101
Cut & Folded Flights 16, 32, 33, 39, 101

D

Dams 58, 62
Decomposing Materials 5
Deflection 4, 26, 30, 72
Degradable Materials 5, 15
Density 5, 19, 22
Design Steps 4
Determine Size of Components 23
Direct Coupled In-line Drive 20
Direction of Conveyed Product 31
Discharges 4, 19, 26, 28, 33, 81, 82, 97, 98, 100, 101
Double Formed Flange Troughs 46, 47
Drive Efficiencies 20, 21
Drives 21
Drive Shaft Keyways 43
Drive Shafts 28, 42, 43
Drop Bottom/Channel Troughs 46, 49, 63
Dura-Link™ Screw Couplings 45
Dura-Shield™ Air Purge Seals 74
Dusty Materials 5, 85

E

Efficiencies, Drives 20, 21
Electric Curved Slide Gates 90
Electric Slide Gates 89
End Bearings 15, 28, 78–80
End Flange Bolt Patterns 86, 87
End Plates 28, 52–57
End/Tail Shafts 28, 42, 45
Engineering 15–27
Engineering Reference Data 102, 103, 104
Equivalent Capacity 16, 19, 22
Examples, Design Calculations 5, 19, 22, 24, 26, 41, 99
Explosion Proof 15
Explosive Materials 5, 15
Extreme Temperatures 15

F

Fatigue Resistant 30
Feeder Screws 17, 92
Fixed (Welded) Paddles 38
Flammability 5
Flange Bolt Patterns 86, 87
Flanged Covers 58
Flanged Gland Seals 72, 75
Flange Feet 28, 51, 52
Flared Trough Bolt Patterns 87
Flared Trough Covers 58
Flared Trough End Plates 52
Flared Troughs 46, 48
Flighting Hand/Pitch 32
Flight Lugs 32, 40
Flight Modification Capacity Factor 16
Flowability 5
Fluidizing Materials 15
Flush End Discharges 82
Food Grade 31, 32
Formed Flange Troughs 46
Formed Flange Tube Troughs 46, 50
Friction 19, 27
Friction HP 19
Full Load Amps 103
Fusion Spray Application 26, 27

G

Gaskets 85
Gates, Slide 88, 89, 90
Gear Motor Reducers 20
Glass Bead Blasting 31
GPS Seals 72, 73
Grease Purge Seals 72, 73
Grease Tubes 71
Guardian™ Seals 72, 73

H

Hanger Bearing Grease Tubes 71
Hanger Bearing HP Factor 22
Hanger Bearing Lubrication 70
Hanger Bearing Max Temps 70
Hangers/Hanger Bearings 15, 19, 22, 26, 28, 64–71, 98, 99
Hardened Shafts 22, 42, 64, 70
Hard Surfacing 27
Heavy Duty 23, 36, 54, 56, 64, 66, 67, 80, 100, 101
Helical Gear Shaft Mounted Reducers 21
Helical Reducers 20
Helicoid Screws 32, 36
Hex bolts 41, 99
Hip-Roof (Ridged) Covers 58, 60, 71, 101
Horsepower Calculation 19
Hygroscopic Materials 5, 15

I

Inclined Screw Conveyors 15, 19, 22, 91
Inlet/Discharge Bolt Patterns 81
Inlets 28, 81, 97, 100, 101
Installation 19, 41, 64, 98, 99
Integral Ribbon Flights 32, 37
Internal Collars/Bushings 25, 28, 71
Interrupted Flights 32, 33

J

Jacketed Troughs 4, 15, 46

K

Keyways, Shafts 43

L

Left Hand 32
Live Bottoms 92
Load Bearing Stress 24, 41
Loading 16, 19, 22, 24, 78, 97
Load-out Systems 93
Lock Out Power 99
Lubrication, Hanger Bearings 70
Lump Size 7, 9, 18, 19

PHONE 319.364.5600 | 800.452.4027 **FAX** 319.364.6449

INDEX

M

Maintenance 20, 27, 42, 44, 46, 52, 99
Mass Flow 92
Material Characteristics 5–14
Material Classification Codes 4, 5, 22
Material Classification Tables 6–14
Material HP 19
Maximum Component Torque 25
Maximum Lump Size 18
Max Operating Temp, Hanger Bearings 70
Max Torque, Cplg. Bolts 41, 99, 103, 104
Mechanical Efficiencies, Drives 20, 21
Metered Flow Rate 92
Mixers 2, 4, 95
Mixing in Transit 15
Mixing Paddle Capacity Factor 16
Modified Quick-Change Hangers 64
Modulus of Elasticity 26
Moment of Inertia 26
Motion/Speed Sensor 45
Motor Full Load Amps 103
Mounting Feet 51
Multiple Screw Feeders 92

N

Needle Peening 31
Neoprene Gaskets 85
Nitrile Gaskets 85
Non-Sparking Components 15

O

Operating Speed 19
Overload HP Factor 19, 21

P

Paddle Capacity Factor 16
Paddles 15, 16, 19, 22, 27, 33, 38, 101
Paddle Screws 32, 33
Passivation 31
Pedestal Drive Shafts 42
Pedestal End Shafts 42
Pillow Block Bearings 52, 78, 80
Pipe Cross-Sections 30
Pipe Dimensions and Weights 104
Pitch 16, 19, 22, 27, 32–40, 101
Pitch Capacity Factor 16
Plate Seals 72, 73
Plug Screws 93
Pneumatic Curved Slide Gates 89
Pneumatic Slide Gates 88
Polishing 31
Positive Discharges 83
Post Ribbon Flights 32, 37
Power Conversions 102
Precautions 97
Presses 2, 94
Press Screws 33

Q

Quick-Change Hangers 64, 65, 68, 69
Quick-Links/Quick-Keys 45

R

Rack and Pinion Curved Slide Gates 90
Rack and Pinion Slide Gates 88
Radial Clearance 18, 19
Rectangular Troughs 46
Reducers 21
Removable Keys 45
Required Capacity 16, 19, 22
Required Radial Clearance 18
Ribbon Flights 15, 16, 22, 33, 37, 101
Ridged/Hip Roof Covers 58, 60, 71, 101
Right Hand vs. Left Hand Flighting 32, 92
Roller Bearings 26, 79
Round Discharges 81
Round Inlets 81
Round Inlets/Discharges 81
RPM 16, 17, 19, 22, 24, 27, 40, 92
Rubber Gaskets 85
Run-out 40

S

Saddles 51, 98
Safety Devices 97
Screw Abrasion Score 27
Screw Clamps 63
Screw Conveyor Components 28
Screw Conveyor Drives 20, 21
Screw Conveyor Spec Sheet 100, 101
Screw Deflection 26
Screw Feeders 17, 92
Screw Part Number Designation 32
Screw Presses 2, 94
Screws 28, 32–42
Screws, Right Hand/Left Hand 31, 92
Screw Straightening 40
Screw Tip Speed 27
Screw Weld Finishes 31, 100
Seal Comparison 76
Sectional Flight Screws 32, 33, 34, 36
Sectional vs. Helicoid Flighting 36
Semi-Flanged Covers 58
Shaft End Angle 26
Shaftless Screws 33, 40
Shaft Mount Drives 20
Shaft Run-out 40
Shafts 2, 24, 25, 42–45, 70, 72, 98, 99, 101
Shaft Seal Comparison 76
Shaft Seals 28, 72–77
Shear Stress, Coupling Bolts 24
Sheet & Plate Thickness , Weight 104
Short Pitch Screws 33
Shot Peening 31
Shrouded Trough Covers 62
Shrouds 17, 58, 62, 92
Silicone Gasketing 85
Slide Gates 88, 89, 90, 93
Snap Rings 43
Solid/Standard Tube Troughs 46
Special Materials 15
Special Screw Weld Finishes 31, 100
Spec Sheet, Conveyor 4, 100, 101
Speed/Motion Sensor 45
Speed, Screw 4, 15, 16, 19, 20, 22, 24, 27, 83, 97
Spherical Bearings 78
Split Gland Seals 72, 75
Spring Clamps 63
Sprockets 20, 21
Static Balancing 17
Static Electricity 5
Sticky Materials 15
Strong-Arm Quick-Switch™ Hangers 64, 67
Structural Steel/Supports 94

T

Tail/End Shafts 28, 42, 45
Tapered Diameter 92
Teflon (PTFE) 22, 85
Temperature Conversion Formulas 103
Thermal Expansion 15, 26
Thin Walled Bushings 24, 25
Tip Speed 27
Toggle Clamps 63
Torque 24, 25, 30, 41, 99, 103
Torsional Limits, Components 4, 24, 25, 30
Total HP 19
Toxic Fumes 5
Trough Abrasion Score 27
Trough End Flanges 84, 85, 86, 87
Trough Load 17, 40
Troughs 15, 26, 27, 28, 46–50, 52, 58, 63, 85, 98
Trough Thickness 23
Tube Trough Bolt Pattern 81
Tube Trough End Plate 52, 57
Tube Trough Hangers 64
Tube Troughs 29, 46, 50, 84, 101
Tubular Inlets & Discharges 81
Tungsten Carbide 27
Twin Screw Feeders 92

U

U-Trough Bolt Patterns 86
U-Troughs 29, 46, 47, 52, 54, 58, 84

V

Variable Pitch Flighting 92
V-belts 21, 22
Vertical Screw Conveyors 14, 21, 91
VFDs 19, 22, 24
Viscous or Sticky Materials 15
Viton Gaskets 85
Volume Formulas 102, 103

W

Warning Labels 97
Waste Packing Seals 72, 74
Wear Indicator Hangers 66
Weld Finishes 31, 100
Wigid™ Hangers 64
Worm Gear Drives 21